TÜVRheinland® CERT ISO 9001

# M+S HYDRAULIC

# HEAVY DUTY MOTORS

# HEAVY DUTY HYDRAULIC MOTORS

## CONTENTS


Page

- Hydraulic Motors Series MSWM ..... 4
- Hydraulic Motors Series MTK ..... 8
- Hydraulic Motors Series MTM ..... 19
- Hydraulic Motors Series TMF ..... 34
- Hydraulic Motors Series TMYF ..... 43
- Hydraulic Motors Series MVM ..... 52
- Hydraulic Motors Series VMF ..... 63
- Motor Special Features ..... 69
- Motors with Speed Sensor ..... 70
- Application Calculations ..... 72



“M+S HYDRAULIC” can accept no responsibility for possible errors in catalogues, brochures and other printed material.
“M+S HYDRAULIC” reserves the right to alter its products without notice. This also applies to products already on order provided that such alterations can be made without subsequential changes being necessary in specifications already agreed.

# DISC VALVE HYDRAULIC MOTORS

## GENERAL INFORMATION:

Orbit motors convert hydraulic energy (pressure, oil flow) into mechanical energy (torque, speed). Hydraulic orbit motors operate on the principle of an internal gear (rotor) rotating within a fixed external gear (stator). The internal gear transmits the torque generated by the application of pressure from hydraulic oil fed into motor which is then delivered via the motor's output shaft. Orbit motors have high starting torque and constant output torque at wide speed range. The output shaft runs on tapered roller bearings and can absorb high axial and radial forces.

DISTRIBUTOR VALVE
MSWM, MTK, MTM, TMF, MVM, MVMC, VMF series motors have disk valve: the distributor valve has been separated from output shaft and is driven by short cardan shaft. A balance plate counterbalances the hydraulic forces around the distributor valve. It gives the motors high efficiency - even at high pressures, and good starting characteristics.

GEAR WHEEL SET
There are two forms of gear wheel set: Gerotor set has plain teeth and Roll-gerotor set with teeth fitted with rollers.
MSWM, MTK, MTM, TMF, MVM, MVMC, VMF series motors have roll-gerotor set. The rollers reduce local stress and the tangential reaction forces on the rotor reducing friction to a minimum. This gives long operating life and better efficiency even at continuous high pressures.

## FEATURES:

**Standard Motor**

The standard motor mounting flange is located as close to the output shaft as possible. This type of mounting supports the motor close to the shaft load. This mounting flange is also compatible with many standard gear boxes.

**Wheel Motor**

The wheel motor mounting flange is located near the center of the motor which permits part or all of the motor to be located inside the wheel or roller hub. In traction drive applications, loads can be positioned over the motor bearings for best bearing life. This wheel motor mounting flange provides design flexibility in many applications.

**Short Motor**

This motor is assembled without the output shaft, bearings and bearing housing and has the same drive components as the standard motors. The short motor is especially suited for applications such as gear boxes, winch, reel and roll drives. Short motor applications must be designed with a bearing supported internal spline to mate with the short motor drive. Product designs using these hydraulic motors provide considerable cost savings.

**Low Leakage**

LL Series hydraulic motors are designed to operate at the whole standard range of working conditions (pressure drop and frequency of rotation), but with considerable decreased volumetric losses in the drain ports. This motors are suitable for hydraulic systems with series-connected motors with demands for low leakage.

**Low Speed Valve**

LSV feature optimizes the motor for low-speed performance. Motors with this valving provide very low speed while maintaining high torque. They are designed to run continuously at low speed (up to 200 RPM) at normal pressure drop and reduced flow. Optimal run is guaranteed at frequency of rotation from 20 to 50 RPM. Motors with this valving have an increased starting pressure and are not recommended for using at pressure drop less than 40 bar [580 PSI].

**Motors with Speed Sensor**

Motors are available with integrated inductive speed sensor. The output signal is a standardized voltage signal that can be used to control the speed of a motor. The torque and the radial load of the motor are not affected by the installation of speed sensor.

# HYDRAULIC MOTORS MSWM

## APPLICATION

- » Sawmill machines
- » Woodworking machines
- » Metal working machines
- » Agriculture machines
- » Road building machines
- » Mining machinery
- » Food industries
- » Special vehicles etc.

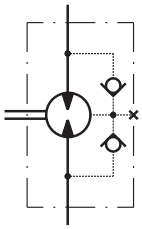

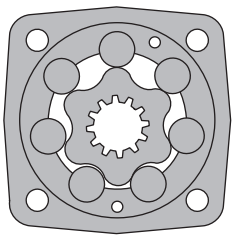

## CONTENTS


Specification data ..... 5
Dimensions and mounting ..... 6
Permissible shaft loads ..... 6
Shaft extensions ..... 7
Order code ..... 7


## OPTIONS

- » Model- Disc valve, roll-gerotor
- » Wheel mount
- » Side and rear ports
- » Shafts- straight, splined and tapered
- » Metric and BSPP ports
- » Other special features

## GENERAL

| | |
|---|---|
| **Max. Displacement,** $cm^3$/rev [$in^3$/rev] | 397 [24.2] |
| **Max. Speed,** [RPM] | 560 |
| **Max. Torque,** daNm [lb-in] | cont.: 90 [7965] int: 110 [9735] |
| **Max. Output,** kW [HP] | 24 [32.2] |
| **Max. Pressure Drop,** bar [PSI] | cont.: 200 [2900] int: 225 [3270] |
| **Max. Oil Flow,** lpm [GPM] | 90 [24] |
| **Min. Speed,** [RPM] | 5 |
| **Pressure fluid** | Mineral based- HLP(DIN 51524) or HM(ISO 6743/4) |
| **Temperature range,** $^oC$ [$^oF$] | -40÷140 [-40÷284] |
| **Optimal Viscosity range,** $mm^2$/s [SUS] | 20÷75 [98÷347] |
| **Filtration** | ISO code 20/16 (Min. recommended fluid filtration of 25 micron) |

**Oil flow in drain line**

| Pressure drop bar [PSI] | Viscosity $mm^2$/s [SUS] | Oil flow in drain line lpm [GPM] |
|---|---|---|
| 140 [2030] | 20 [98] | 1,5 [.396] |
| | 35 [164] | 1 [.264] |
| 210 [3045] | 20 [98] | 3 [.793] |
| | 35 [164] | 2 [.528] |

**Pressure Losses**

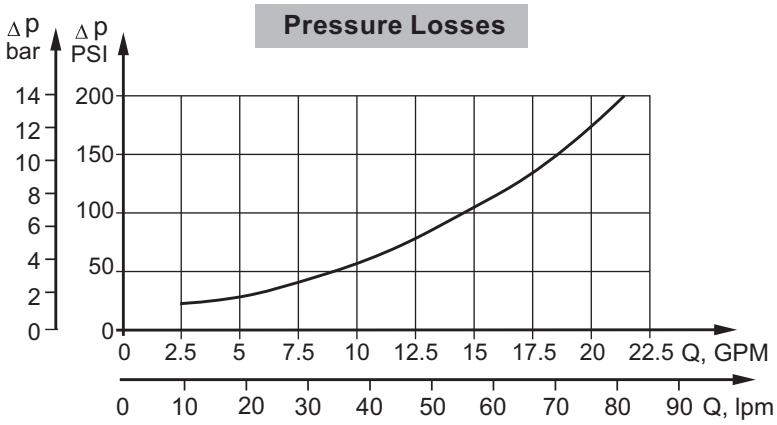

## SPECIFICATION DATA

| Type | | MSWM 160 | MSWM 200 | MSWM 250 | MSWM 315 | MSWM 400 |
|---|---|---|---|---|---|---|
| Displacement, $cm^3$/rev [$in^3$/rev] | | 159,7 [9.74] | 200 [12.2] | 250 [15.3] | 314,9 [19.2] | 397 [24.2] |
| Max. Speed, [RPM] | Cont. | 470 | 375 | 300 | 240 | 185 |
| | Int.* | 560 | 450 | 360 | 285 | 225 |
| Max. Torque daNm [lb-in] | Cont. | 46 [4070] | 56,6 [5010] | 70,8 [6270] | 90,0 [7965] | 90,0 [7965] |
| | Int.* | 51,5 [4560] | 64,5 [5710] | 80,6 [7135] | 96,0 [8500] | 97,0 [8585] |
| | Peak** | 51,5 [4560] | 65 [5755] | 80,6 [7135] | 108 [9560] | 110 [9735] |
| Max. Output kW [HP] | Cont. | 18,6 [24.9] | 18,1 [24.3] | 18,0 [24.1] | 17,0 [22.8] | 11,0 [14.7] |
| | Int.* | 24,0 [32.2] | 24,0 [32.2] | 23,8 [31.9] | 20,2 [27.1] | 12 [16.1] |
| Max. Pressure Drop bar [PSI] | Cont. | 200 [2900] | 200 [2900] | 200 [2900] | 200 [2900] | 160 [2320] |
| | Int.* | 225 [3270] | 225 [3270] | 225 [3270] | 220 [3190] | 175 [2540] |
| | Peak** | 225 [3270] | 225 [3270] | 225 [3270] | 225 [3270] | 200 [2900] |
| Max. Oil Flow lpm [GPM] | Cont. | 75 [20] | 75 [20] | 75 [20] | 75 [20] | 75 [20] |
| | Int.* | 90 [24] | 90 [24] | 90 [24] | 90 [24] | 90 [24] |
| Max. Inlet Pressure bar [PSI] | Cont. | 210 [3045] | 210 [3045] | 210 [3045] | 210 [3045] | 210 [3045] |
| | Int.* | 250 [3625] | 250 [3625] | 250 [3625] | 250 [3625] | 250 [3625] |
| | Peak** | 300 [4350] | 300 [4350] | 300 [4350] | 300 [4350] | 300 [4350] |
| Max. Return Pressure with Drain Line bar [PSI] | Cont. | 140 [2030] | 140 [2030] | 140 [2030] | 140 [2030] | 140 [2030] |
| | Int.* | 175 [2540] | 175 [2540] | 175 [2540] | 175 [2540] | 175 [2540] |
| | Peak** | 210 [3045] | 210 [3045] | 210 [3045] | 210 [3045] | 210 [3045] |
| Max. Starting Pressure with Unloaded Shaft, bar [PSI] | | 10 [145] | 10 [145] | 10 [145] | 10 [145] | 10 [145] |
| Min. Starting Torque daNm [lb-in] | | 36,9 [3270] | 46,2 [4090] | 58,0 [5135] | 73,8 [6530] | 72,0 [6370] |
| Min. Speed***, [RPM] | | 6 | 6 | 6 | 5 | 5 |
| Weight, kg [lb] | | 15,3 [33.7] | 15,7 [34.6] | 16,2 [35.7] | 16,9 [37.3] | 17,8 [39.2] |

* Intermittent operation: the permissible values may occur for max. 10% of every minute.
** Peak load: the permissible values may occur for max. 1% of every minute.
*** For speeds lower than given, consult factory or your regional manager.

1. Intermittent speed and intermittent pressure must not occur simultaneously.
2. Recommended filtration is per ISO cleanliness code 20/16. A nominal filtration of 25 micron or better.
3. Recommend using a premium quality, anti-wear type mineral based hydraulic oil HLP(DIN51524) or HM ( ISO 6743/4). If using synthetic fluids consult the factory for alternative seal materials.
4. Recommended minimum oil viscosity 13 $mm^2/s$ [70 SUS] at 50°C [122°F].
5. Recommended maximum system operating temperature is 82°C [180°F].
6. To assure optimum motor life fill with fluid prior to loading and run at moderate load and speed for 10-15 minutes.

## DIMENSIONS AND MOUNTING DATA

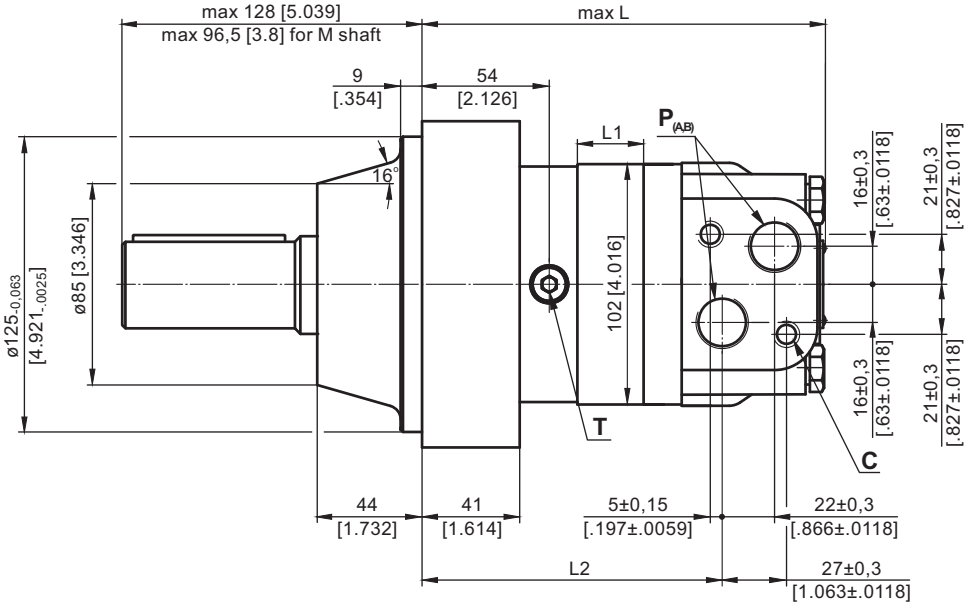


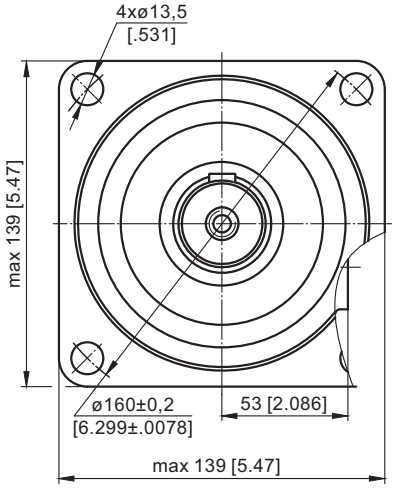


**C** : 2xM10 - 12 mm [.47 in] depth
**P**$_{(A,B)}$ : 2xG1/2 or 2xM22x1,5 - 15 mm [.59 in] depth
**T** : G ¼ or M14x1,5 - 12 mm [.47 in] depth (plugged)

**E** Rear Ports

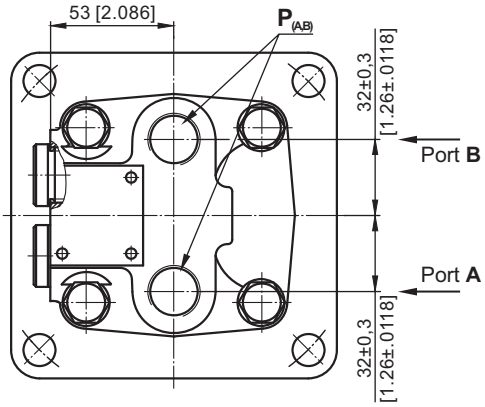


| Type | L, mm [in] | L2, mm [in] | L1, mm [in] |
|---|---|---|---|
| MSWM 160 | 170,5[6.71] | 129,3[5.09] | 27,8 [1.09] |
| MSWME 160 | 177,5[6.99] | | |
| MSWM 200 | 177,5[6.99] | 136,3[5.37] | 34,8 [1.37] |
| MSWME 200 | 184,5[7.26] | | |
| MSWM 250 | 186,0[7.32] | 145,0[5.71] | 43,5 [1.71] |
| MSWME 250 | 193,0[7.60] | | |
| MSWM 315 | 197,5[7.78] | 157,3[6.19] | 54,8 [2.16] |
| MSWME 315 | 206,5[8.13] | | |
| MSWM 400 | 212,0[8.35] | 171,0[6.73] | 69,4 [2.73] |
| MSWME 400 | 219,0[8.62] | | |

**Standard Rotation**
Viewed from Shaft End
Port **A** Pressurized - **CW**
Port **B** Pressurized - **CCW**

**Reverse Rotation**
Viewed from Shaft End
Port **A** Pressurized - **CCW**
Port **B** Pressurized - **CW**

mm [in]

## PERMISSIBLE SHAFT LOADS

The output shaft runs in tapered bearings that permit high axial and radial forces.
Curve "**1**" shows max. radial shaft load at bearing life of 2000 hours at 100 RPM.
Curve "**2**" shows max. radial shaft load at bearing life of 3000 hours at 200 RPM.

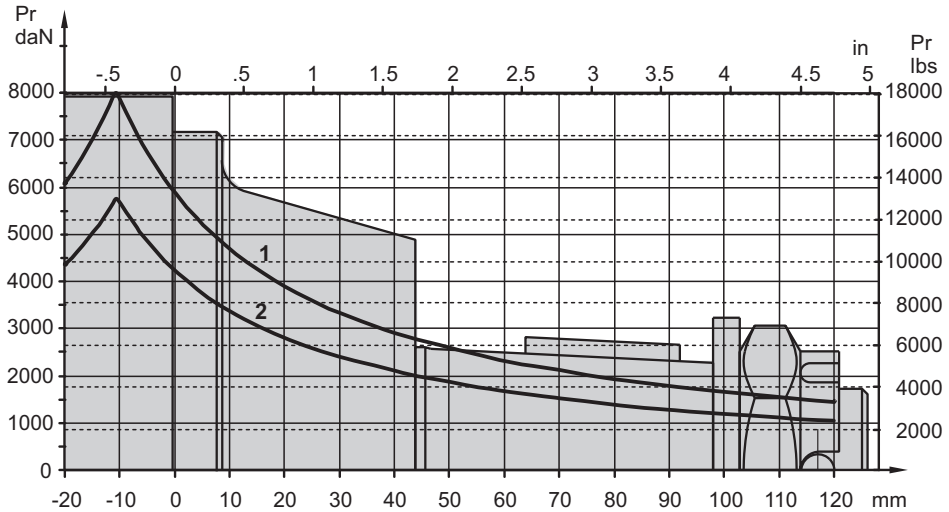

## SHAFT EXTENSIONS

**C** - ø40 straight, Parallel key A12x8x70 DIN 6885
Max. Torque 132,8 daNm [11755 lb-in]

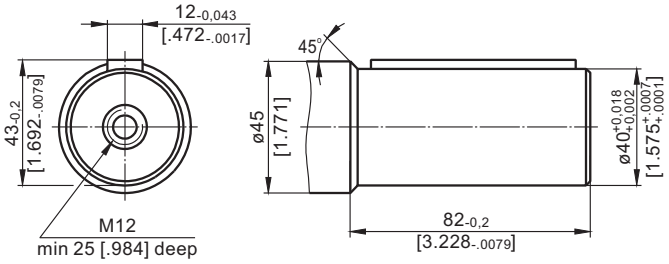


**K** - tapered 1:10, Parallel key B12x8x28 DIN 6885
Max. Torque 210,7 daNm [18650 lb-in]

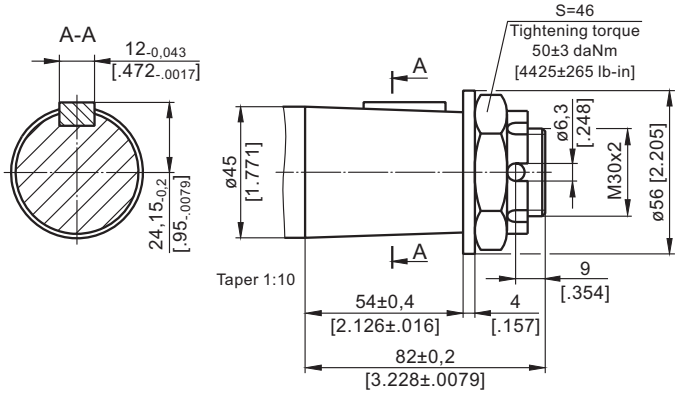


**CO** - ø1½" straight, Parallel key 3/8"x3/8"x 2¼" BS46
Max. Torque 132,8 daNm [11755 lb-in]

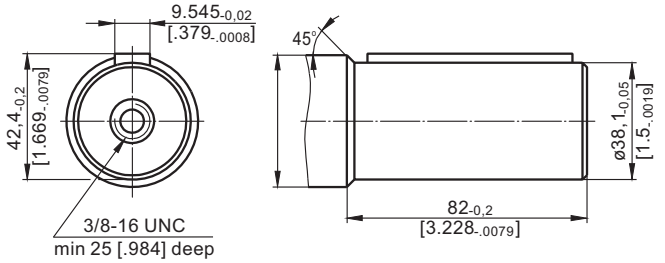


**SH** - ø1½" splined 17T, DP 12/24 ANSI B92.1-1976
Max. Torque 132,8 daNm [11755 lb-in]

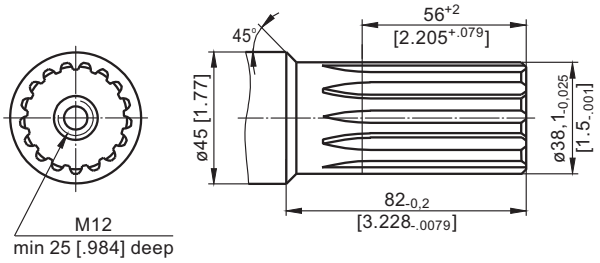


**M** - ø1½" splined 17T, DP 12/24 ANSI B92.1-1976
Max. Torque 132,8 daNm [11755 lb-in]

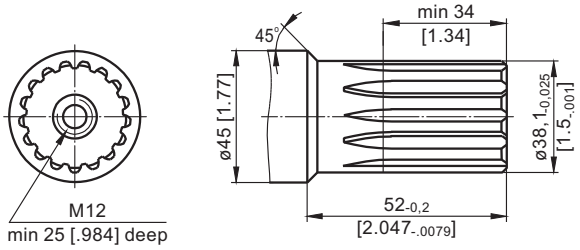


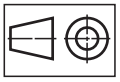

mm [in]

## ORDER CODE

| | 1 | 2 | 3 | 4 | 5 | 6 |
|---|---|---|---|---|---|---|
| **M S W M** | | | | | | |

**Pos.1 - Port type**

omit - Side ports
**E** - Rear ports

**Pos.2 - Displacement code**

| | |
|---|---|
| **160** | - 159,7 $cm^3$/rev [ 9.74 $in^3$/rev] |
| **200** | - 200,0 $cm^3$/rev [12.20 $in^3$/rev] |
| **250** | - 250,0 $cm^3$/rev [15.30 $in^3$/rev] |
| **315** | - 314,9 $cm^3$/rev [19.20 $in^3$/rev] |
| **400** | - 397,0 $cm^3$/rev [24.20 $in^3$/rev] |

**Pos.4 - Shaft Extensions***

| | |
|---|---|
| **C** | - ø40 straight, Parallel key A12x8x70 DIN6885 |
| **CO** | - ø1½" straight, Parallel key 3/8"x3/8"x2¼" BS46 |
| **K** | - ø45 tapered 1:10, Parallel key B12x8x28 DIN6885 |
| **SH** | - ø1½" splined 17T ANS B92.1-1976 |
| **M** | - ø1½" splined 17T ANS B92.1-1976 |

**Pos.4 - Ports**

omit - BSPP (ISO 228)
**E** - Metric (ISO 262)

**Pos.5 - Special Features** (see page 69)

**Pos.6 - Design Series**

omit - Factory specified

**NOTES:**

* The permissible output torque for shafts must not be exceeded!

The hydraulic motors are mangano-phosphatized as standard.

# HYDRAULIC MOTORS MTK

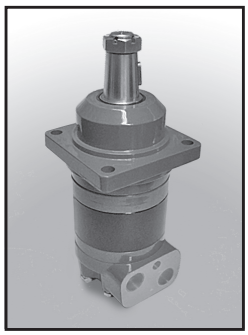

## APPLICATION

- Conveyors
- Metal working machines
- Machines for agriculture
- Road building machines
- Mining machinery
- Food industries
- Special vehicles
- Plastic and rubber machinery etc.

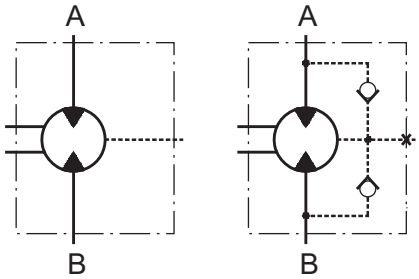


## CONTENTS


Specification data ..... 9
Function diagrams ..... 10÷12
Dimensions and mounting ..... 13÷16
Permissible shaft seal ..... 15
Shaft extensions ..... 17
Permissible shaft loads ..... 18
Order code ..... 18


## OPTIONS

- Model- Disc valve, roll-gerotor
- Flange mount with wheel mount
- Side and rear ports
- Shafts- straight, splined and tapered
- Metric, SAE and BSPP ports
- Other special features

## GENERAL

| | |
|---|---|
| **Max. Displacement,** $cm^3$/rev [$in^3$/rev] | 502,4 [30.65] |
| **Max. Speed,** [RPM] | 630 |
| **Max. Torque,** daNm [lb-in] | cont.: 109 [9648] int.: 136 [12037] |
| **Max. Output,** kW [HP] | 27 [36.2] |
| **Max. Pressure Drop,** bar [PSI] | cont.: 250 [3626] int.: 325 [4714] |
| **Max. Oil Flow,** lpm [GPM] | 100 [26.4] |
| **Min. Speed,** [RPM] | 10 |
| **Permissible Shaft Loads,** daN [lbs] | $P_a$=6000 [13488] |
| **Pressure fluid** | Mineral based- HLP(DIN 51524) or HM(ISO 6743/4) |
| **Temperature range,** $^oC$ [$^oF$] | -40÷140 [-40÷284] |
| **Optimal Viscosity range,** $mm^2$/s [SUS] | 20÷75 [98÷347] |
| **Filtration** | ISO code: 18/16/13 According to ISO 4406-1999 |

### Oil flow in drain line

| Pressure drop bar [PSI] | Viscosity $mm^2$/s [SUS] | Oil flow in drain line lpm [GPM] |
|---|---|---|
| 100 [1450] | 20 [98] | 2,5 [.660] |
| | 35 [164] | 1,8 [.476] |
| 140 [2030] | 20 [98] | 3,5 [.925] |
| | 35 [164] | 2,8 [.740] |

### Pressure Losses

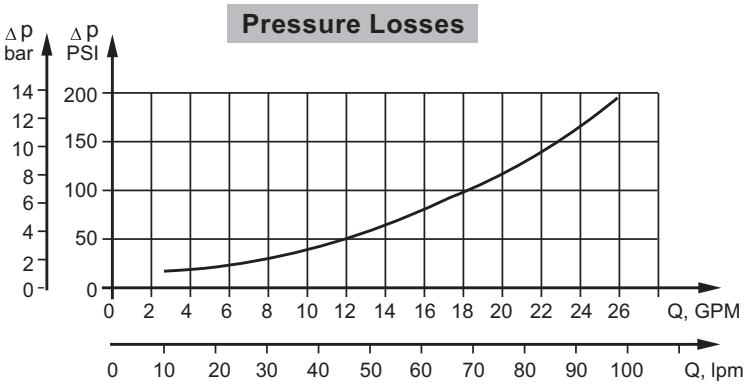

## SPECIFICATION DATA

| Type | | MTK 160 | MTK 200 | MTK 250 | MTK 315 | MTK 400 | MTK 470 | MTK 500 |
|---|---|---|---|---|---|---|---|---|
| **Displacement, $cm^3$/rev [$in^3$/rev]** | | 157,9 [9.63] | 201,3 [12.28] | 252,2 [15.38] | 314,9 [19.2] | 396,8 [24.2] | 470,5 [28.7] | 502,4 [30.65] |
| **Max. Speed, [RPM]** | Cont. | 505 | 400 | 320 | 255 | 200 | 170 | 159 |
| | Int.* | 630 | 500 | 400 | 315 | 250 | 210 | 199 |
| **Max. Torque, daNm [lb-in]** | Cont. | 57 [5045] | 72 [6373] | 91 [8055] | 105 [9293] | 107 [9470] | 102 [9028] | 109 [9648] |
| | Int.* | 72,5 [6420] | 92 [8143] | 107 [9470] | 131 [11595] | 140 [12390] | 133 [11772] | 136 [12037] |
| **Max. Output, kW [HP]** | Cont. | 22 [29.5] | 22 [29.5] | 21 [28.2] | 20 [26.8] | 17,5 [23.5] | 14 [18.8] | 14 [18.8] |
| | Int.* | 27 [36.2] | 27 [36.2] | 25 [33.5] | 23,5 [31.5] | 22 [29.5] | 17.5 [23.5] | 17 [22.8] |
| **Max. Pressure Drop, bar [PSI]** | Cont. | 250 [3626] | 250 [3626] | 250 [3626] | 250 [3626] | 200 [2900] | 160 [2320] | 160 [2320] |
| | Int.* | 325 [4714] | 325 [4714] | 300 [4350] | 300 [4350] | 250 [3626] | 200 [2900] | 200 [2900] |
| **Max. Inlet Pressure, bar [PSI]** | Cont. | 250 [3626] | | | | | | |
| | Int.* | 350 [5077] | | | | | | |
| **Max. Oil Flow, lpm [GPM]** | Cont. | 80 [21.1] | | | | | | |
| | Int.* | 100 [26.4] | | | | | | |
| **Max. Starting Pressure with Unloaded Shaft, bar [PSI]** | | 8 [116] | 8 [116] | 7 [102] | 7 [102] | 7 [102] | 7 [102] | 7 [102] |
| **Min. Starting Torque, daNm [lb-in]** | at max. pressure drop cont. | 43 [3806] | 54 [4780] | 68 [6020] | 79 [6992] | 80 [7080] | 83 [7346] | 84 [7435] |
| | at max. pressure drop int.* | 54.5 [4824] | 69 [6107] | 80 [7080] | 98,5 [8720] | 105 [9294] | 105 [9294] | 105 [9294] |
| **Min. Speed****, RPM** | | 10 | | | | | | |
| **Max. Return Pressure without Drain Line, bar [PSI]** | | see diagram | | | | | | |
| **Max. Return Pressure with Drain Line, bar [PSI]** | Cont. | 140 [2030] | | | | | | |
| | Int.* | 175 [2540] | | | | | | |
| | Peak* | 210 [3046] | | | | | | |

* Intermittent operation: the permissible values may occur for max. 10% of every minute.
** Peak load: the permissible values may occur for max. 1% of every minute.
*** For speeds of 5 RPM lower than given, consult factory or your regional manager
**** For speeds lower than given, consult factory or your regional manager.

1. Intermittent speed and intermittent pressure must not occur simultaneously.
2. Recommended filtration is per ISO cleanliness code 20/16. A nominal filtration of 25 micron or better.
3. Recommend using a premium quality, anti-wear type mineral based hydraulic oil HLP(DIN51524) or HM ( ISO 6743/4). If using synthetic fluids consult the factory for alternative seal materials.
4. Recommended minimum oil viscosity 13 mm²/s [70 SUS] at 50°C [122°F].
5. Recommended maximum system operating temperature is 82°C [180°F].
6. To assure optimum motor life fill with fluid prior to loading and run at moderate load and speed for 10-15 minutes.

# FUNCTION DIAGRAMS

## MTK 160

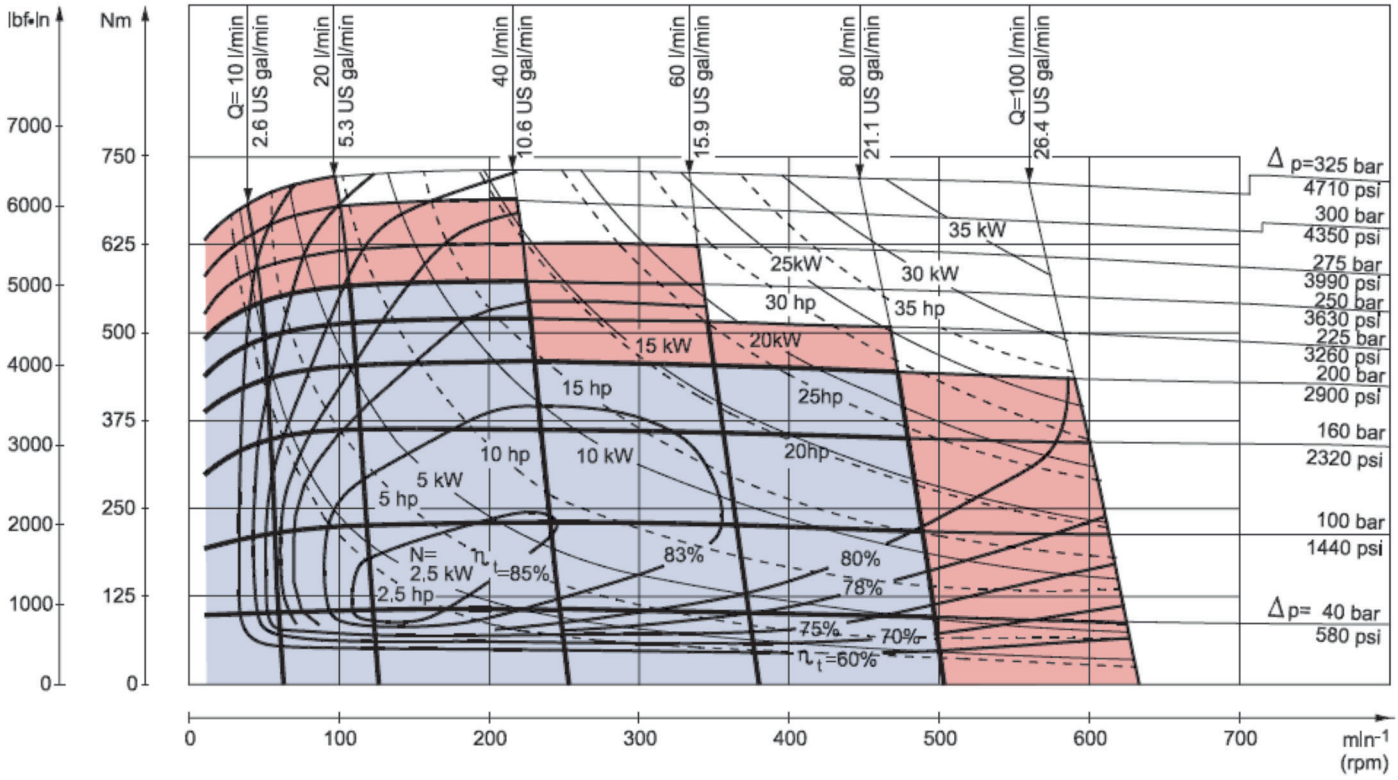


## MTK 200

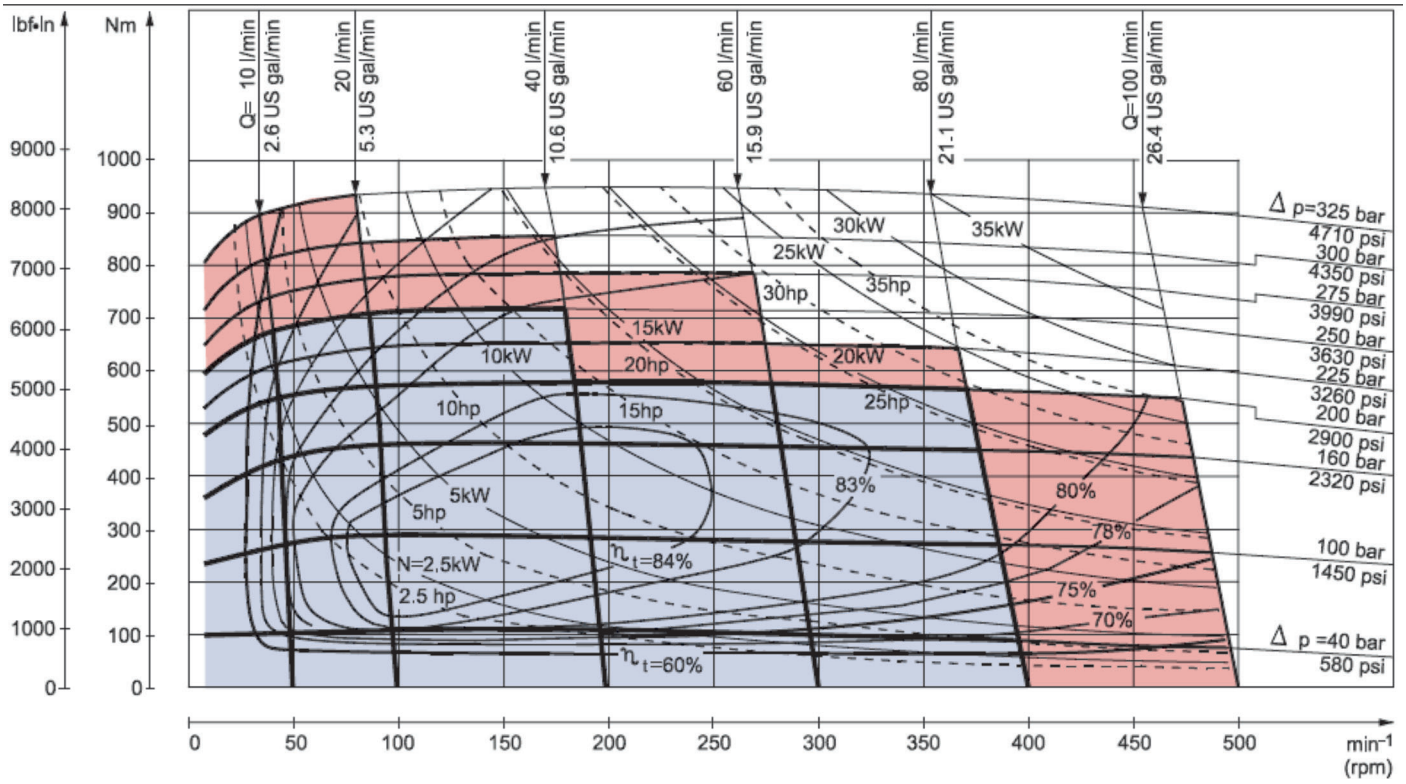


The function diagrams data is for average performance of randomly selected motors at back pressure 5÷10 bar [72.5 PSI÷145 PSI] and oil with viscosity of 32 mm²/s [150 SUS] at 50°C [122°F].

# FUNCTION DIAGRAMS

## MTK 250

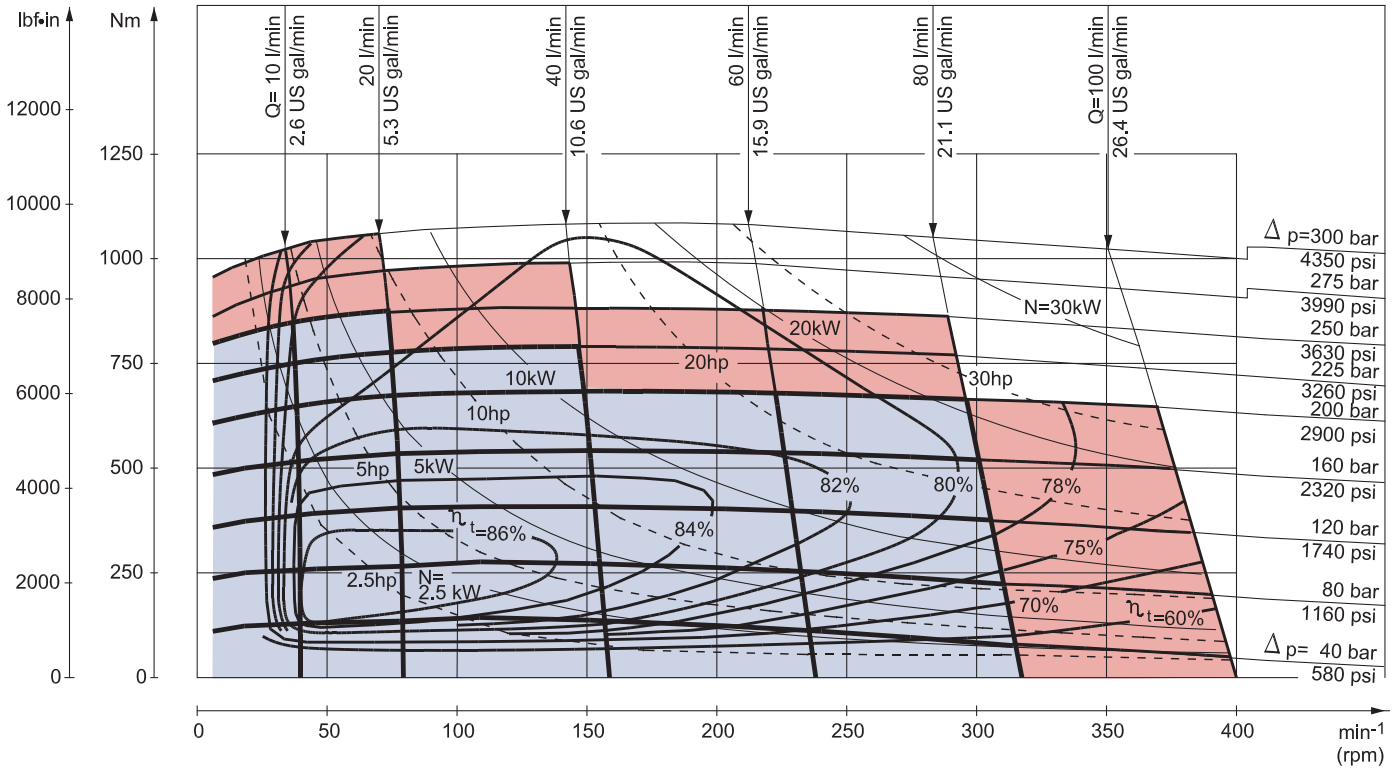


## MTK 315

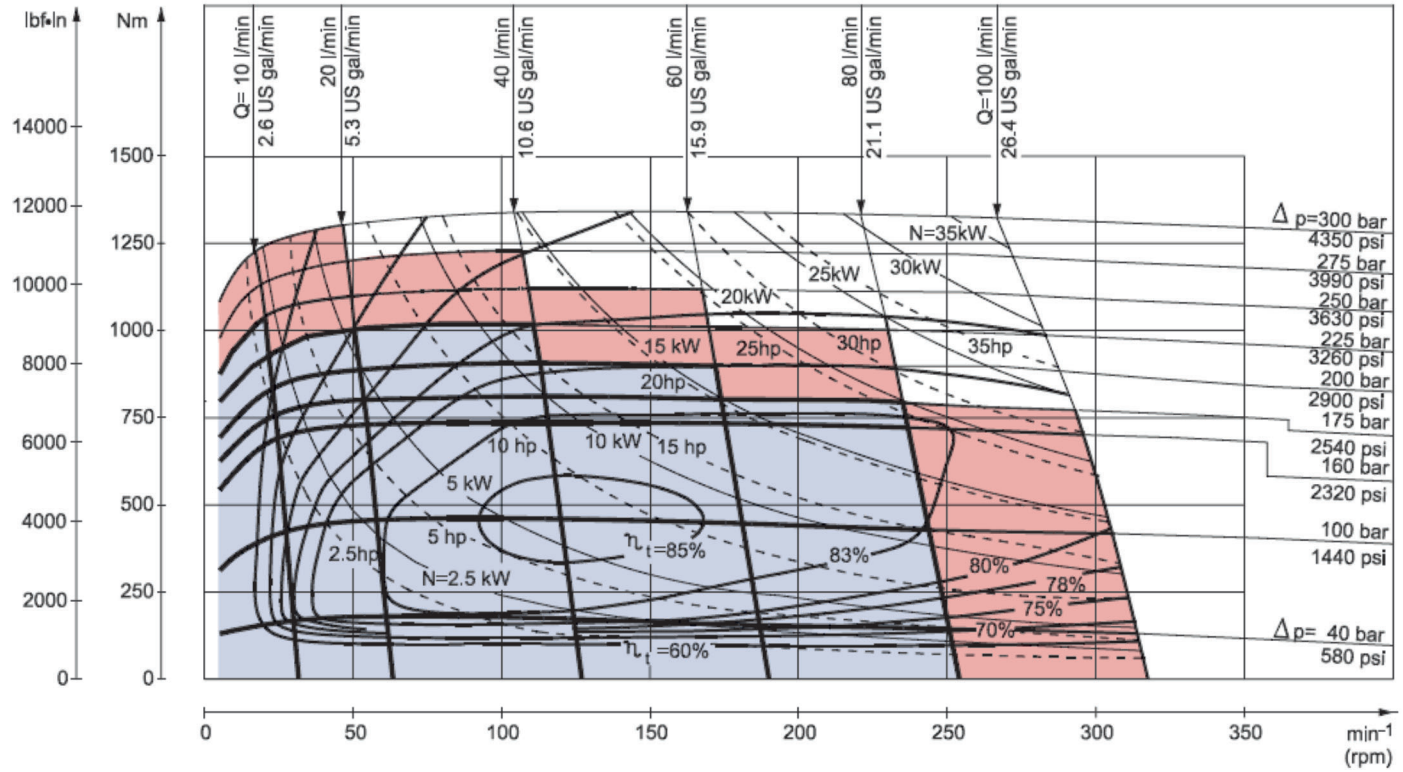


The function diagrams data is for average performance of randomly selected motors at back pressure 5÷10 bar [72.5 PSI÷145 PSI] and oil with viscosity of 32 mm²/s [150 SUS] at 50°C [122°F].

# FUNCTION DIAGRAMS

## MTK 400

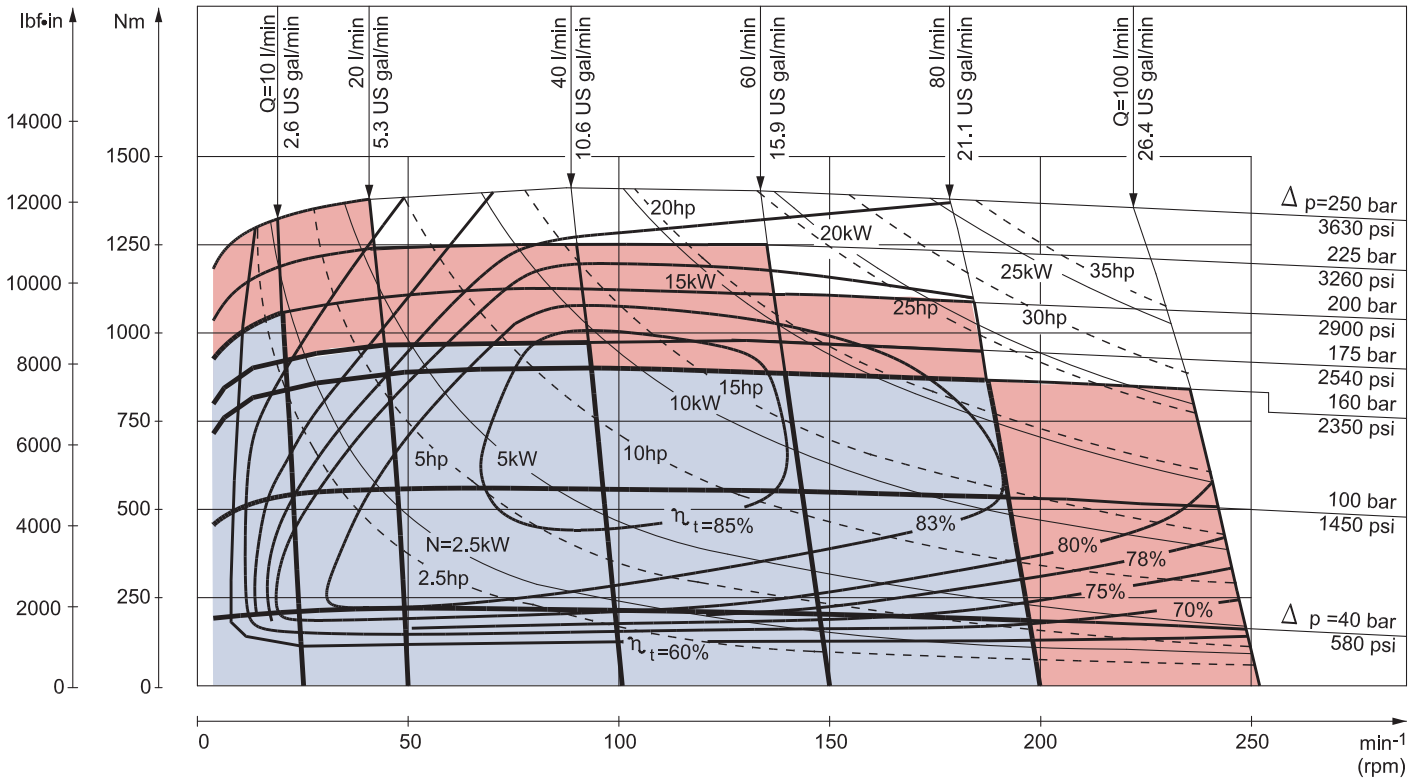


## MTK 470

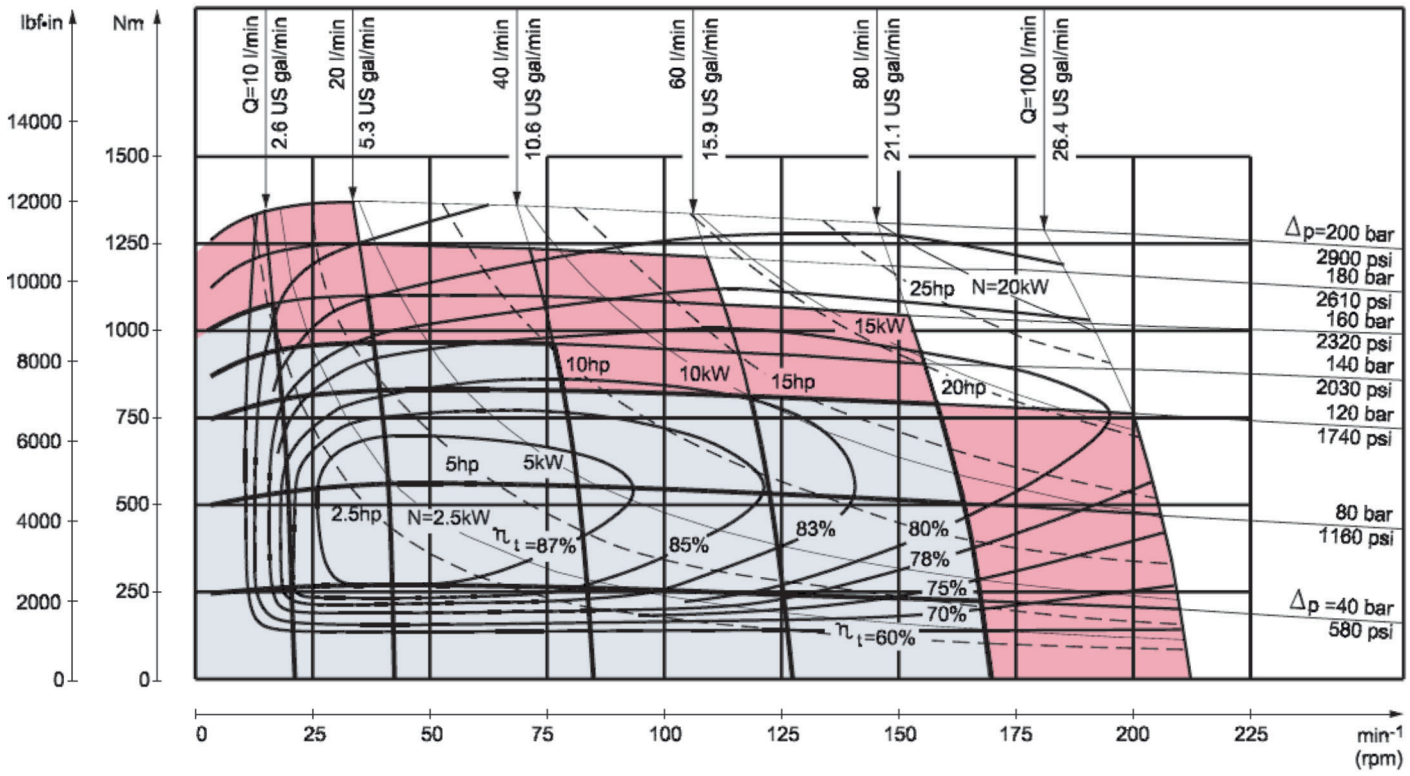


The function diagrams data is for average performance of randomly selected motors at back pressure 5÷10 bar [72.5 PSI÷145 PSI] and oil with viscosity of 32 mm²/s [150 SUS] at 50°C [122°F].

## DIMENSIONS - MTK W and MTK C

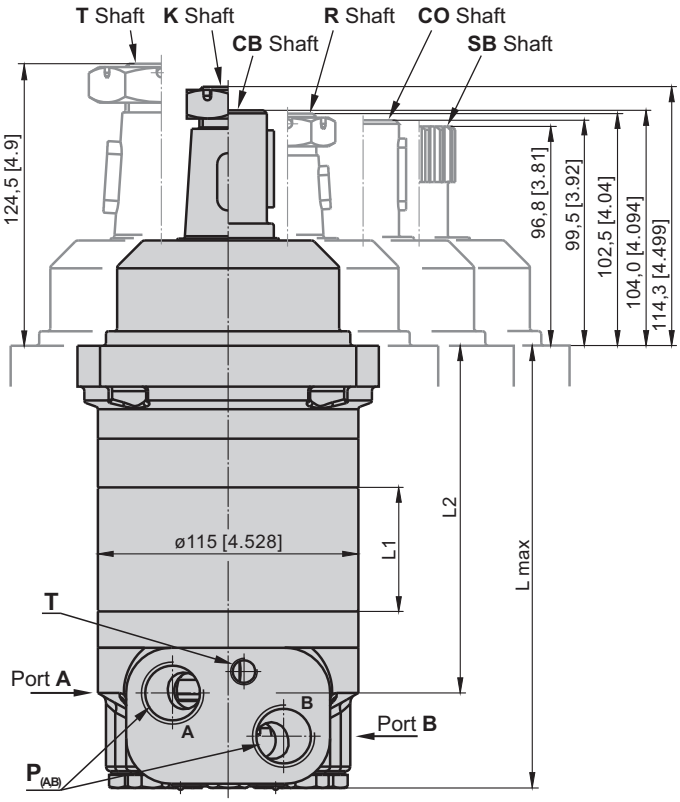


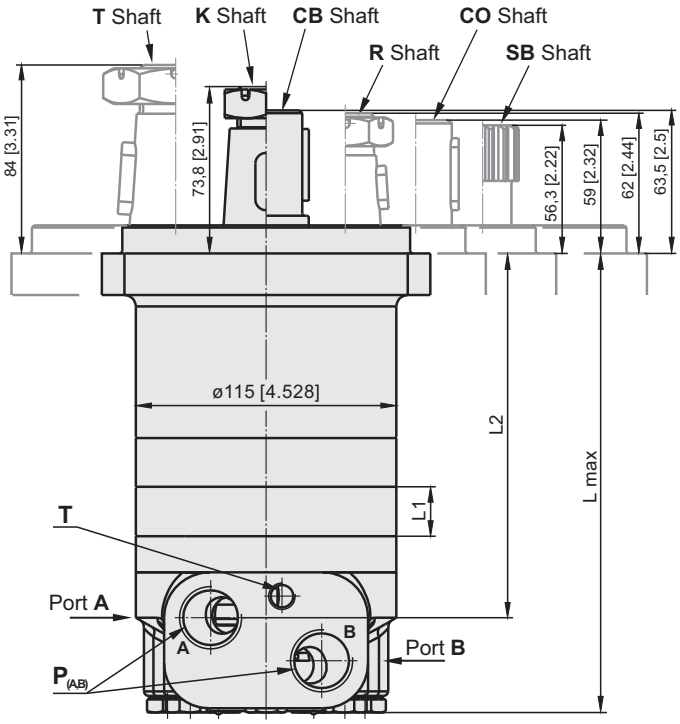


**E** Rear ports

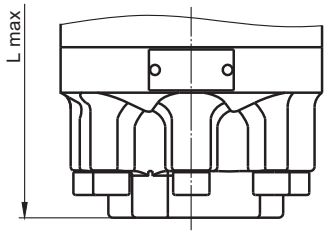


Flange Dim.
See Page 15

Ports Dim.
See Page 16

Shaft Dim.
See Page 17

**Standard Rotation**
Viewed from Shaft End
Port **A** Pressurized - **CW**
Port **B** Pressurized - **CCW**

**Reverse Rotation**
Viewed from Shaft End
Port **A** Pressurized - **CCW**
Port **B** Pressurized - **CW**

**Warning:** Drain line should always be used (if no check valves)!

mm [in]

| | Versions | | | | |
|---|---|---|---|---|---|
| | Side | | | Rear | |
| | 2 | 3 | 4 | 6 | 8 |
| $P_{(A,B)}$ | 2xG3/4<br>17 mm [.67] depth | 2xM27x2<br>17 mm [.67] depth | 2x1 1/16-12UN<br>15 mm [.59] depth | 2xG1/2<br>15 mm [.59] depth | 2x 7/8 -14UNF<br>17 mm [.67] depth |
| T | G1/4<br>12 mm [.472] depth | M14x1,5<br>12 mm [.472] depth | 7/16-20UNF<br>12 mm [.472] depth | G1/4<br>12 mm [.472] depth | 7/16-20UNF<br>12 mm [.472] depth |

| Type | Lmax, mm [in] | $L_2$, mm [in] | *$L_E$, mm [in] | Type | Lmax, mm [in] | $L_2$, mm [in] | *$L_E$, mm [in] | $L_1$, mm [in] |
|---|---|---|---|---|---|---|---|---|
| MTKW160 | 162,7 [6.41] | 120,3 [4.74] | 176,3 [6.94] | MTKC160 | 203,2 [8.00] | 160,8 [6.33] | 216,8 [8.54] | 21,8 [.86] |
| MTKW200 | 168,7 [6.64] | 126,3 [4.97] | 182,3 [7.18] | MTKC200 | 209,2 [8.24] | 166,8 [6.57] | 222,8 [8.77] | 27,8 [1.09] |
| MTKW250 | 175,7 [6.92] | 133,3 [5.25] | 189,3 [7.45] | MTKC250 | 216,2 [8.51] | 173,8 [6.84] | 229,8 [9.05] | 34,8 [1.37] |
| MTKW315 | 183,4 [7.22] | 142,0 [5.59] | 198,0 [7.79] | MTKC315 | 224,9 [8.85] | 182,5 [7.19] | 238,5 [9.39] | 43,5 [1.71] |
| MTKW400 | 195,7 [7.70] | 153,3 [6.04] | 209,3 [8.24] | MTKC400 | 236,2 [9.29] | 193,8 [7.63] | 249,8 [9.83] | 54,8 [2.16] |
| MTKW470 | 205,9 [8.12] | 163,5 [6.44] | 219,5 [8.64] | MTKC470 | 246,4 [9.70] | 204,0 [8.03] | 260,0 [10.24] | 65,0 [2.56] |
| MTKW500 | 209,3 [8.24] | 167,9 [6.61] | 223,9 [8.81] | MTKC500 | 250,8 [9.87] | 208,4 [8.20] | 264,4 [10.41] | 69,4 [2.73] |

## DIMENSIONS - MTK F

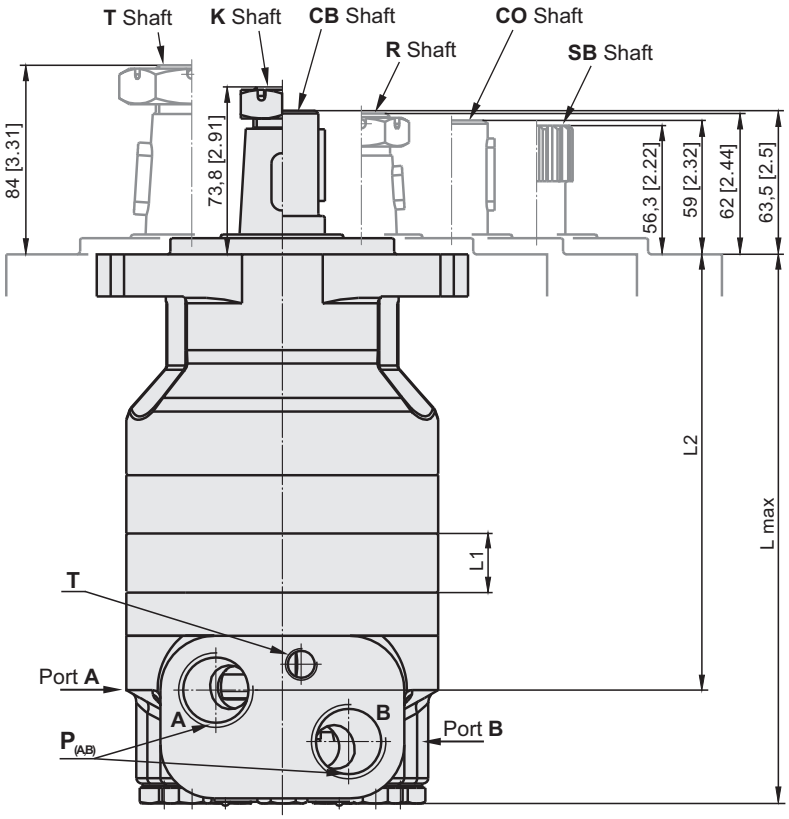


**E** Rear ports

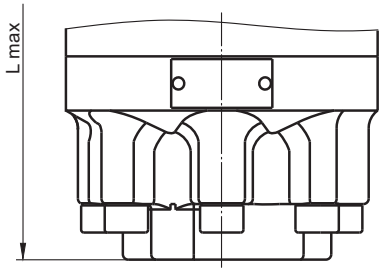


Flange Dim. See Page 15

Ports Dim. See Page 16

Shaft Dim. See Page 17

**Warning:** Drain line should always be used (if no check valves)!

**Standard Rotation**
Viewed from Shaft End
Port **A** Pressurized - **CW**
Port **B** Pressurized - **CCW**

**Reverse Rotation**
Viewed from Shaft End
Port **A** Pressurized - **CCW**
Port **B** Pressurized - **CW**

| | Versions | | | | |
|---|---|---|---|---|---|
| | Side | | | Rear | |
| | 2 | 3 | 4 | 6 | 8 |
| $P_{(A,B)}$ | 2xG3/4<br>17 mm [.67] depth | 2xM27x2<br>17 mm [.67] depth | 2x1 1/16-12UN<br>15 mm [.59] depth | 2xG1/2<br>15 mm [.59] depth | 2x 7/8 -14UNF<br>17 mm [.67] depth |
| T | G¼<br>12 mm [.472] depth | M14x1,5<br>12 mm [.472] depth | 7/16 -20UNF<br>12 mm [.472] depth | G¼<br>12 mm [.472] depth | 7/16 -20UNF<br>12 mm [.472] depth |

| Type | Lmax, mm [in] | $L_2$, mm [in] | *$L_E$, mm [in] | $L_1$, mm [in] |
|---|---|---|---|---|
| MTKF 160 | 203,2 [8.00] | 160,8 [6.33] | 216,8 [8.54] | 21,8 [.86] |
| MTKF 200 | 209,2 [8.24] | 166,8 [6.57] | 222,8 [8.77] | 27,8 [1.09] |
| MTKF 250 | 216,2 [8.51] | 173,8 [6.84] | 229,8 [9.05] | 34,8 [1.37] |
| MTKF 315 | 224,9 [8.85] | 182,5 [7.19] | 238,5 [9.39] | 43,5 [1.71] |
| MTKF 400 | 236,2 [9.29] | 193,8 [7.63] | 249,8 [9.83] | 54,8 [2.16] |
| MTKF 470 | 246,4 [9.70] | 204,0 [8.03] | 260,0 [10.24] | 65,0 [2.56] |
| MTKF 500 | 250,8 [9.87] | 208,4 [8.20] | 264,4 [10.41] | 69,4 [2.73] |

mm [in]

# MOUNTING

## W Wheel Mount (4 Holes)

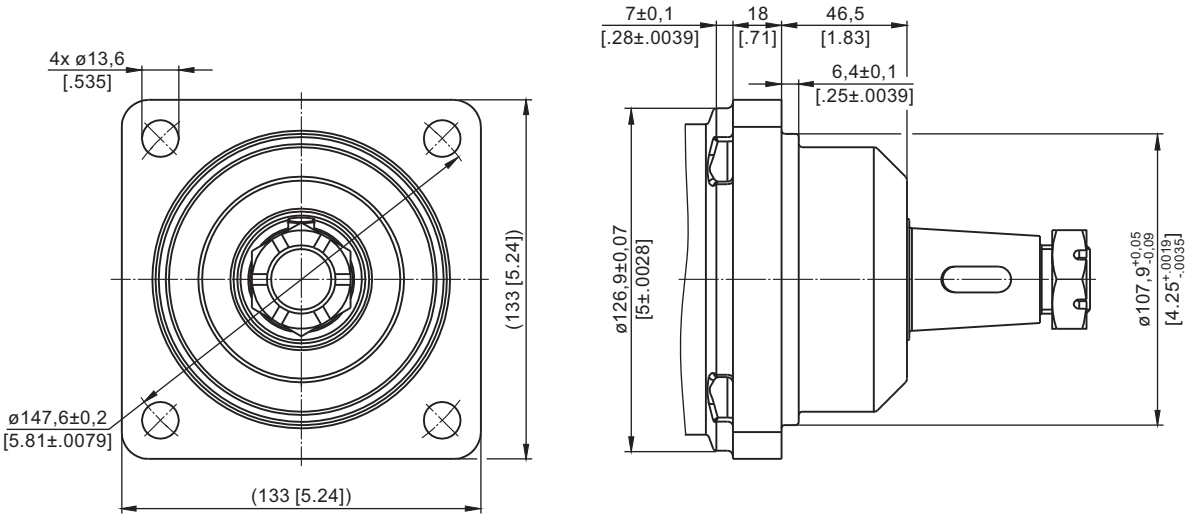


## C Square Mount (4 Holes)

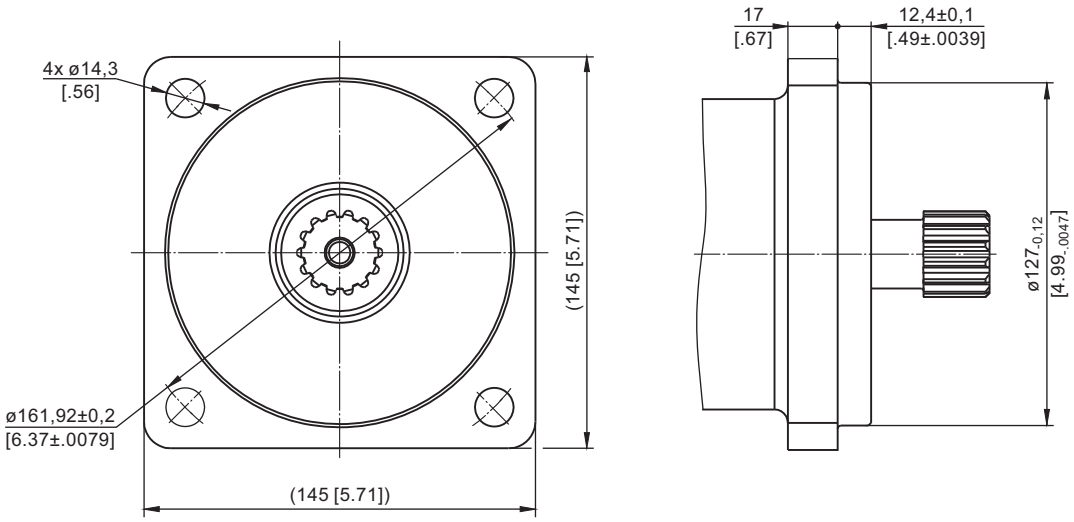


## F Magneto Mount (6 Holes)

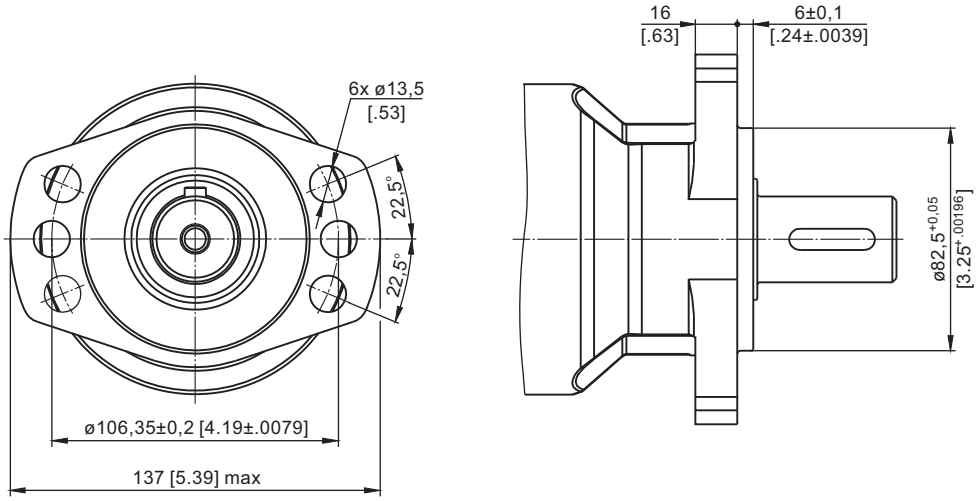


mm [in]

## PORTS

Versions 2 3 4

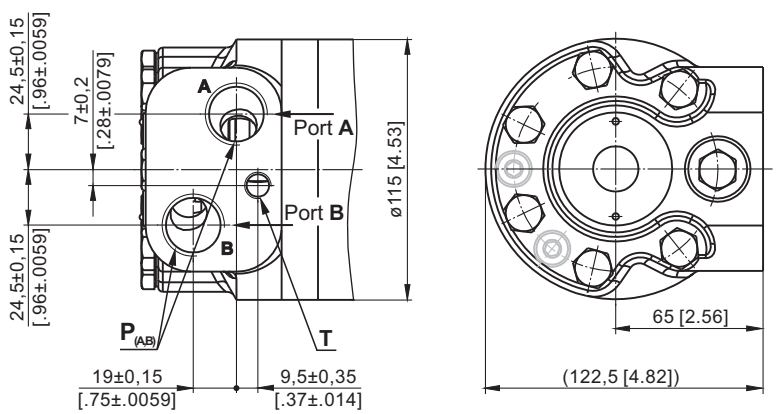


Versions 6 8

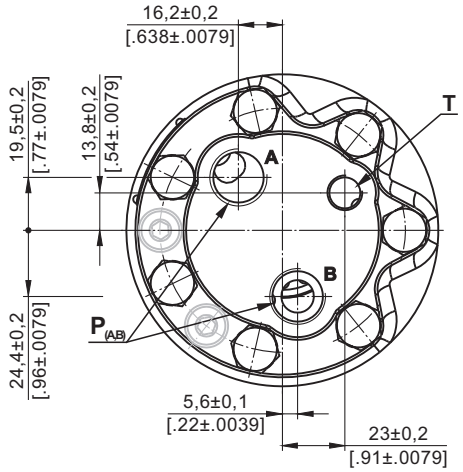


| | Versions | | | | |
|---|---|---|---|---|---|
| | Side | | | Rear | |
| | 2 | 3 | 4 | 6 | 8 |
| $P_{(A,B)}$ | 2xG3/4<br>17 mm [.67]<br>depth | 2xM27x2<br>17 mm [.67]<br>depth | 2x1 1/16-12UN<br>15 mm [.59]<br>depth | 2xG1/2<br>15 mm [.59]<br>depth | 2x 7/8 -14UNF<br>17 mm [.67]<br>depth |
| T | G¼<br>12 mm [.472]<br>depth | M14x1,5<br>12 mm [.472]<br>depth | 7/16-20UNF<br>12 mm [.472]<br>depth | G¼<br>12 mm [.472]<br>depth | 7/16-20UNF<br>12 mm [.472]<br>depth |

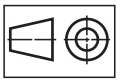

mm [in]

## PERMISSIBLE SHAFT LOADS

### MTKF

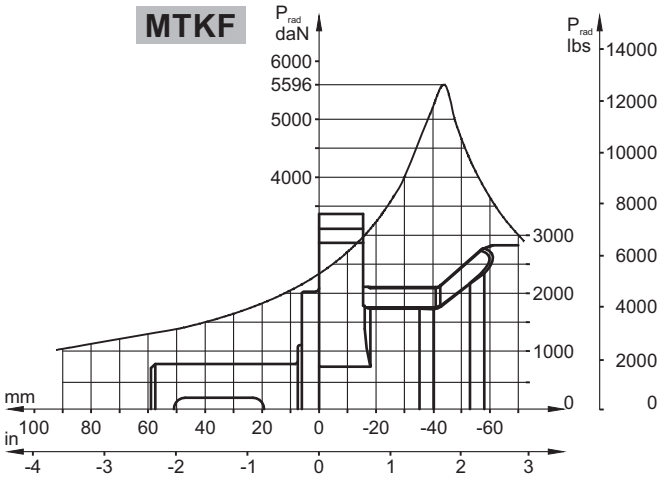


The curves apply to a B10 bearing life (ISO281) of 2000 hours at 100 RPM.

The curves apply to a B10 bearing life (ISO281) of 2000 hours at 100 RPM.

### MTKC

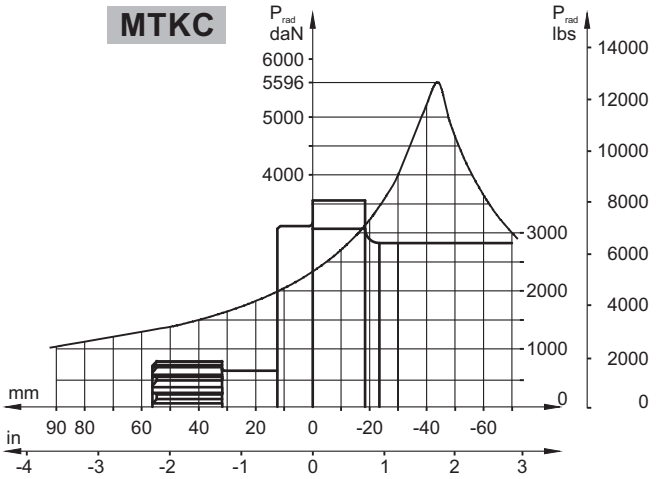


### MTKW

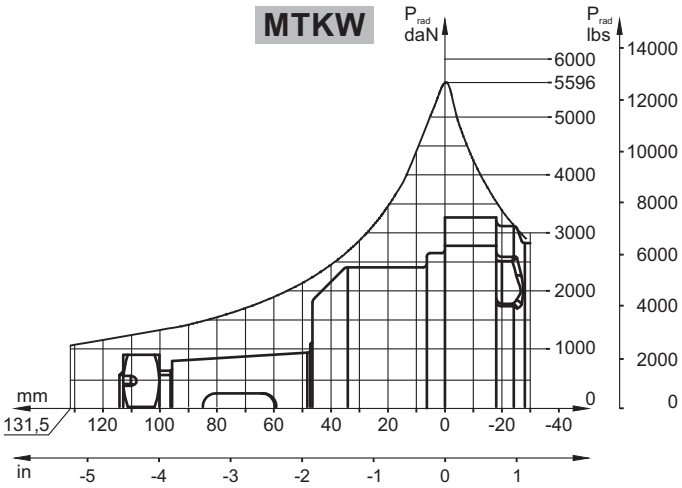

# SHAFT EXTENSIONS

## CO - ø1¼" [31,75] srtaight, Parallel key 5/16"x5/16"x1¼"
Max. Torque 77 daNm [6815 lb-in]

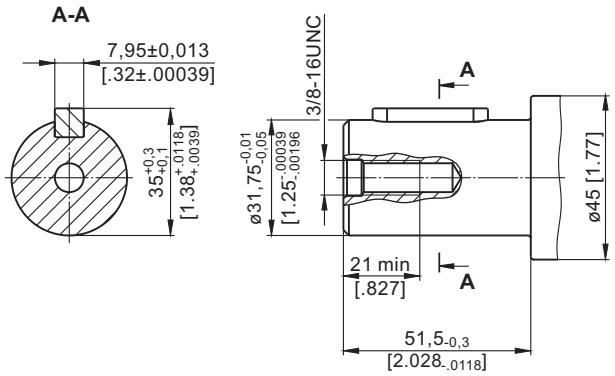


## R - ø1¼" [31,75] tapered 1:8, Parallel key 5/16"x5/16"x¾"
Max. Torque 77 daNm [6815 lb-in]

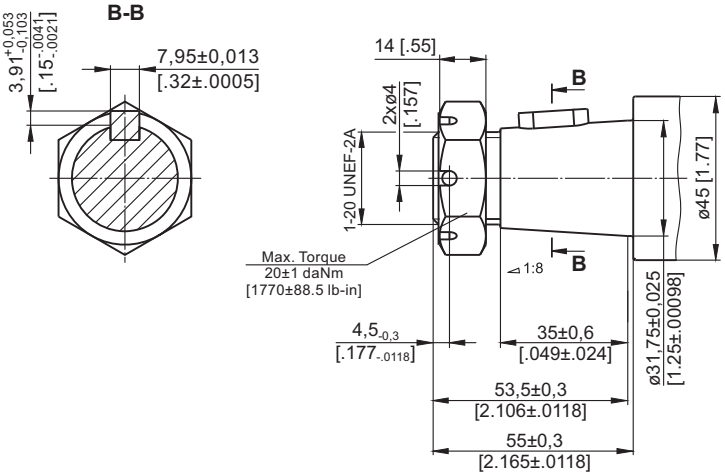


## CB - ø1½" [38,1] straight, Parallel key ⅜"x⅜"x1¼" BS46
Max. Torque 132,8 daNm [11755 lb-in]

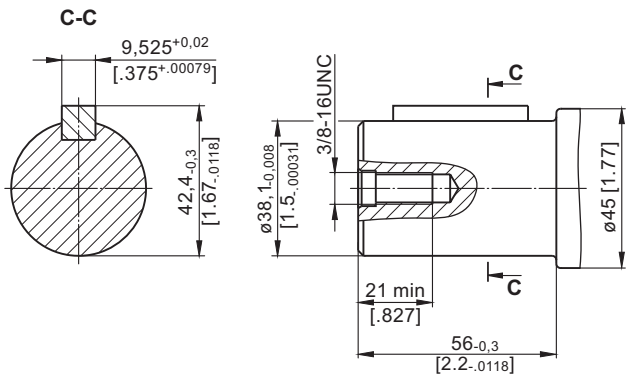


## K - ø1½" [38,1] tapered 1:8, Parallel key ⅜"x⅜"x1"
Max. Torque 89 daNm [7878 lb-in]

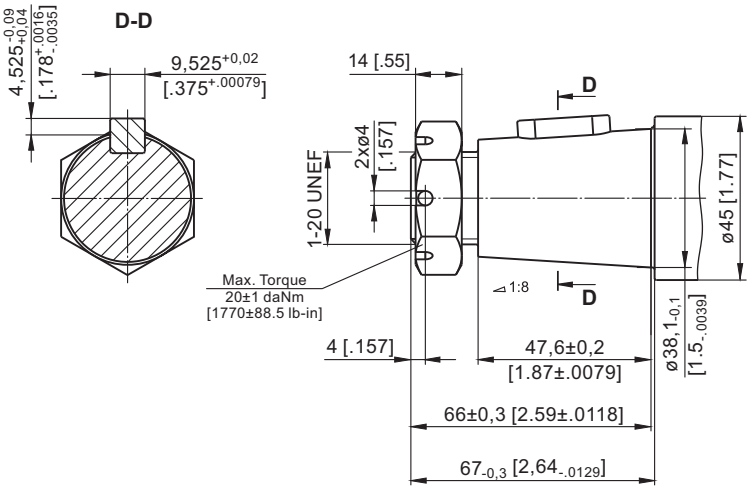


## SB - ø1¼" [31,75] 14T Splined ANSI B92.1-1970, 12/24
Max. Torque 77 daNm [6815 lb-in]

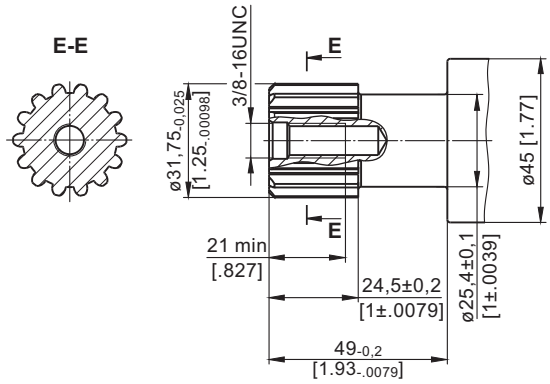


## T - ø1 1/16" [41,275] tapered 1:8, Parallel key 7/16"x7/16"x1¼"
Max. Torque 100 daNm [8850 lb-in]

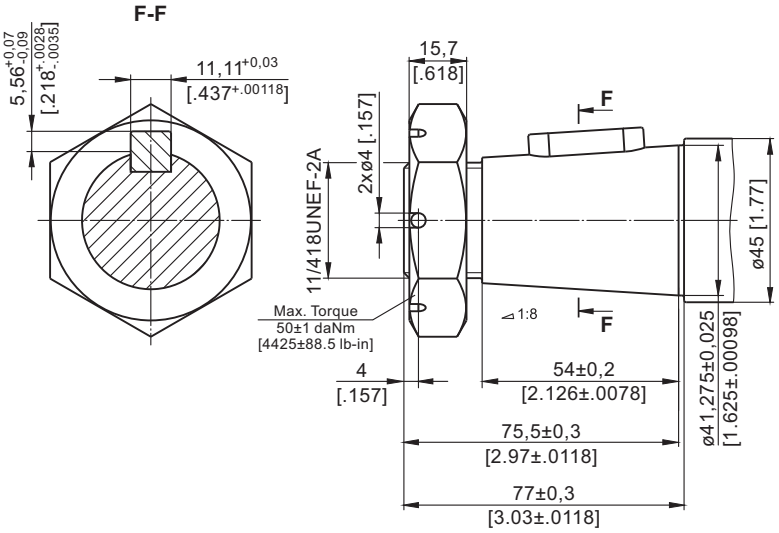


mm [in]

## MAX. PERMISSIBLE SHAFT SEAL PRESSURE

Max. return pressure without drain line or
max. pressure in the drain line

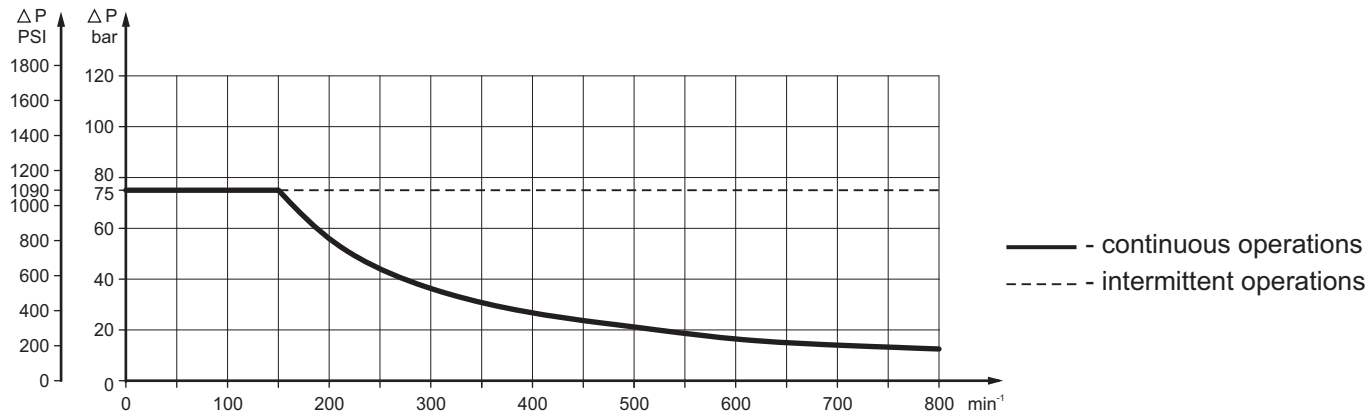


## ORDER CODE

| | 1 | 2 | 3 | 4 | 5 | 6 | 7 | 8 |
|---|---|---|---|---|---|---|---|---|
| **M T K** | | | | | | | **HD** | |

**Pos.1 - Mounting Flange**

- **W** - 4-Bolt flange, Wheel Motor spigot diameter 107,9 mm [2.25 in] - BC 147,6 mm [5.81 in]
- **C** - 4-Bolt flange, spigot diameter 127 mm [4.99 in]- BC 161,92 mm [6.375 in]
- **F** - Bolt flange, spigot diameter 82,5 mm [3.25 in]- BC 106,35 mm [4.19 in]

**Pos.2 - Port type**

- omit - Side ports
- **E** - Rear ports

**Pos.3 - Displacement code**

- **160** - 157,9 $cm^3$/rev [ 9.63 $in^3$/rev]
- **200** - 201,3 $cm^3$/rev [12.28 $in^3$/rev]
- **250** - 252,2 $cm^3$/rev [15.38 $in^3$/rev]
- **315** - 314,9 $cm^3$/rev [19.20 $in^3$/rev]
- **400** - 396,8 $cm^3$/rev [24.20 $in^3$/rev]
- **470** - 470,5 $cm^3$/rev [28.70 $in^3$/rev]
- **500** - 502,4 $cm^3$/rev [30.65 $in^3$/rev]

**Pos.4 - Shaft Extensions***

- **CO** - ø1¼" [31,75] straight, Parallel key 5/16"x5/16"x1¼", 3/8-16 UNC
- **CB** - ø1½" [38,1] straight, Parallel key 3/8"x3/8"x1¾B S46
- **SB** - ø1¼" [31,75] 14T Splined ANSI B92.1-1970, 12/24
- **R** - ø1¼" [31,75] tapered 1:8, Parallel key 5/16"x5/16"x¾", 1-20 UNEF
- **K** - ø1½" [38,1] tapered 1:8, Parallel key 3/8"x3/8"x1", 1-20 UNEF
- **T** - ø1 1/16" [41,275] tapered 1:8, Parallel key 7/16"x7/16"x1¼"

**Pos.5 - Port Size/Type**

- **2** - side ports, 2xG 3/4, G1/4 BSP (ISO 228)
- **3** - side ports, 2xM27x2, M14x1,5 - 6H (ISO 262)
- **4** - side ports, 2x1 1/16-12 UN, 7/16-20 UNF
- **6** - rear ports, 2xG 1/2, G1/4 BSP (ISO 228)
- **8** - rear ports, 2x7/8-14 UNF, 7/16-20 UNF

**Pos.6 - Check Valves**

- omit - without check valves
- **1** - with check valves

**Pos.7 - Special Features**

- **HD** - Reinforced motor **HD****

For Other **Special Features** see page 69

**Pos.8 - Design Series**

- omit - Factory specified

**Notes:** * The permissible output torque for shafts must be not exceeded!
** Drain line should always be used.

The hydraulic motors are mangano phosphatized as standard.

# HYDRAULIC MOTORS MTM

## APPLICATION

» Skid Steer Loaders
» Metal working machines
» Trenchers
» Augers
» Agriculture machines
» Road building machines
» Special vehicles
» Mine machines
» Woodworking and sawmill machinery
» Conveyors etc.

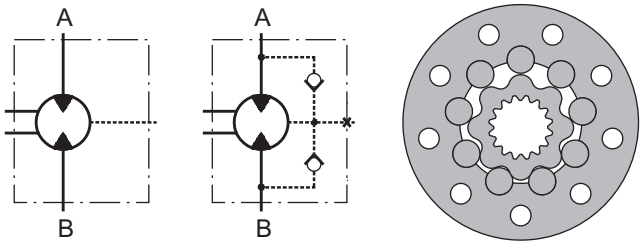


## OPTIONS

» Model- Disc valve, roll-gerotor
» Flange with wheel mount
» Short motor
» Side ports
» Shafts- straight, splined and tapered
» BSPP ports;
» Other special features.

## CONTENTS


Specification data ..... 20
Function diagrams ..... 21÷24
Dimensions and mounting ..... 25÷27
Permissible shaft seal pressure ..... 28
Shaft extensions ..... 29
Permissible shaft loads ..... 29
Dimensions and mounting MTMV ..... 30
Dimensions and mounting MTM6V ..... 31
Internal spline data ..... 33
Order code ..... 33


## EXCELLENCE

» High torque and pressure drop
» High inlet pressure
» High starting torque
» Improved efficiency at high pressure drop
» Smooth operation at low speed

## GENERAL

| | |
|---|---|
| **Max. Displacement,** $cm^3$/rev [$in^3$/rev] | 724 [44.2] |
| **Max. Speed,** [RPM] | 750 |
| **Max. Torque,** daNm [lb-in] | cont.: 183 [16200] int.: 229 [20270] |
| **Max. Output,** kW [HP] | 70 [94] |
| **Max. Pressure Drop,** bar [PSI] | cont.: 250 [3600] int.: 350 [5080] |
| **Max. Oil Flow,** lpm [GPM] | 150 [40] |
| **Min. Speed,** [RPM] | 5 |
| **Pressure fluid** | Mineral based- HLP(DIN 51524) or HM(ISO 6743/4) |
| **Temperature range,** $^oC$ [$^oF$] | -40÷140 [-40÷284] |
| **Optimal Viscosity range,** $mm^2$/s [SUS] | 20÷75 [98÷347] |
| **Filtration** | ISO code: 18/16/13 According to ISO 4406-1999 |

**Oil flow in drain line**

| Pressure drop bar [PSI] | Viscosity $mm^2$/s [SUS] | Oil flow in drain line lpm [GPM] |
|---|---|---|
| 140 [2030] | 20 [98] | 2,5 [.660] |
| | 35 [164] | 1,5 [.396] |
| 210 [3045] | 20 [98] | 5 [1.321] |
| | 35 [164] | 3 [.793] |

**Pressure Losses**

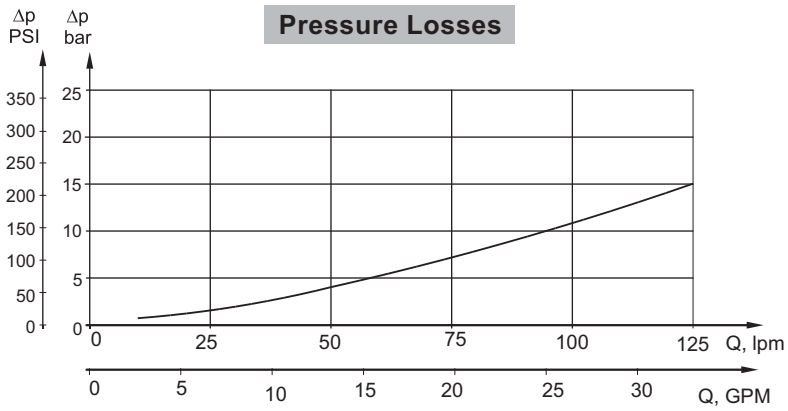

## SPECIFICATION DATA

| Type | | MTM 200 | MTM 250 | MTM 315 | MTM 400 | MTM 470 | MTM 500 | MTM 630 | MTM 725 |
|---|---|---|---|---|---|---|---|---|---|
| Displacement, $cm^3$/rev [$in^3$/rev] | | 201,4 [12.29] | 251,8 [15.36] | 326,3 [19.9] | 410,9 [25.06] | 475 [28.97] | 523,6 [31.95] | 631,2 [38.52] | 724 [44.2] |
| Max. Speed, [RPM] | Cont. | 625 | 500 | 380 | 305 | 260 | 240 | 190 | 170 |
| | Int.* | 750 | 600 | 460 | 365 | 315 | 285 | 230 | 215 |
| Max. Torque, daNm [lb-in] | Cont. | 74 [6550] | 90 [7965] | 116 [10265] | 147 [13010] | 171 [15135] | 172 [15225] | 183 [16200] | 160 [14160] |
| | Int.* | 102 [9030] | 128 [11330] | 163 [14425] | 206 [18232] | 215 [16030] | 215 [16030] | 229 [20270] | 192 [17000] |
| | Peak** | 115 [10180] | 144 [12745] | 186 [16460] | 235 [20800] | 240 [21240] | 240 [21240] | 274 [24250] | 240 [21240] |
| Max. Output, kW [HP] | Cont. | 41 [55] | 41 [55] | 41 [55] | 41 [55] | 41 [55] | 37,5 [50] | 28 [37,5] | 26 [35] |
| | Int.* | 70 [94] | 70 [94] | 70 [94] | 70 [94] | 55 [74] | 51 [68] | 42 [56] | 40 [54] |
| Max. Pressure Drop, bar [PSI] | Cont. | 250 [3600] | 250 [3600] | 250 [3600] | 250 [3600] | 250 [3600] | 230 [3340] | 200 [2900] | 160 [2320] |
| | Int.* | 350 [5080] | 350 [5080] | 350 [5080] | 350 [5080] | 315 [4570] | 280 [4060] | 250 [3625] | 210 [3045] |
| | Peak** | 400 [5800] | 400 [5800] | 400 [5800] | 400 [5800] | 350 [5080] | 320 [4640] | 300 [4350] | 260 [3770] |
| Max. Oil Flow, lpm [GPM] | Cont. | 125 [33] | 125 [33] | 125 [33] | 125 [33] | 125 [33] | 125 [33] | 125 [33] | 125 [33] |
| | Int.* | 150 [40] | 150 [40] | 150 [40] | 150 [40] | 150 [40] | 150 [40] | 150 [40] | 150 [40] |
| Max. Inlet Pressure, bar [PSI] | Cont. | 270 [3920] | 270 [3920] | 270 [3920] | 270 [3920] | 270 [3920] | 270 [3920] | 270 [3920] | 270 [3920] |
| | Int.* | 370 [5370] | 370 [5370] | 370 [5370] | 370 [5370] | 370 [5370] | 370 [5370] | 370 [5370] | 370 [5370] |
| | Peak** | 420 [6100] | 420 [6100] | 420 [6100] | 420 [6100] | 420 [6100] | 420 [6100] | 420 [6100] | 420 [6100] |
| Max. Starting Pressure with Unloaded Shaft, bar [PSI] | | 6 [90] | 6 [90] | 6 [90] | 6 [90] | 6 [90] | 6 [90] | 6 [90] | 6 [90] |
| Min. Starting Torque, daNm [lb-in] | | 60 [5310] | 75 [6640] | 97 [8585] | 122 [10800] | 142 [12570] | 143 [12655] | 145 [12830] | 148 [13100] |
| Min. Speed***, [RPM] | | 5 | 5 | 5 | 5 | 5 | 5 | 5 | 5 |
| Weight, kg [lb] | MTM | 26,9 [59.3] | 27,3 [60.2] | 28,1 [62] | 29 [64] | 29,7 [65.5] | 30,2 [66.6] | 29,7 [65.5] | 31 [68.4] |
| | MTMW | 27,4 [60.4] | 27,8 [61.3] | 28,6 [63.1] | 29,5 [65.1] | 30,2 [66.6] | 30,7 [67.7] | 30,2 [66.6] | 31,5 [69.5] |
| | MTMV | 15,7 [34.6] | 16,1 [35.5] | 16,9 [37.3] | 17,8 [39.3] | 18,5 [40.8] | 19 [41.9] | 18,5 [40.8] | 19,8 [43.7] |

* Intermittent operation: the permissible values may occur for max. 10% of every minute.
** Peak load: the permissible values may occur for max. 1% of every minute.
*** For speeds lower than given, consult factory or your regional manager.

1. Intermittent speed and intermittent pressure must not occur simultaneously.
2. Recommended filtration is per ISO cleanliness code 20/16. A nominal filtration of 25 micron or better.
3. Recommend using a premium quality, anti-wear type mineral based hydraulic oil HLP(DIN51524) or HM ( ISO 6743/4). If using synthetic fluids consult the factory for alternative seal materials.
4. Recommended minimum oil viscosity 13 mm²/s [70 SUS] at 50°C [122°F].
5. Recommended maximum system operating temperature is 82°C [180°F].
6. To assure optimum motor life fill with fluid prior to loading and run at moderate load and speed for 10-15 minutes.

## MTM 200

## FUNCTION DIAGRAMS

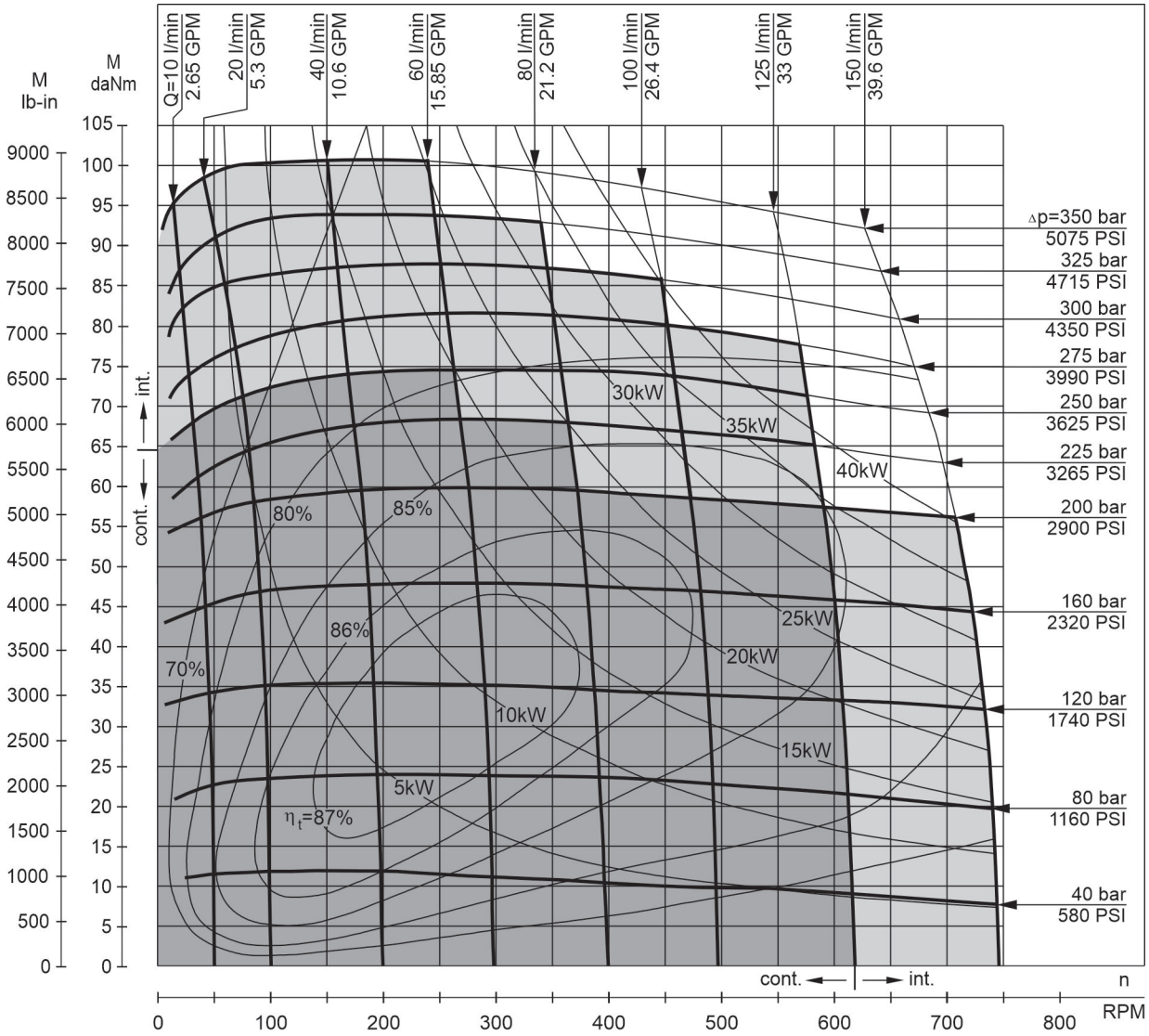


## MTM 250

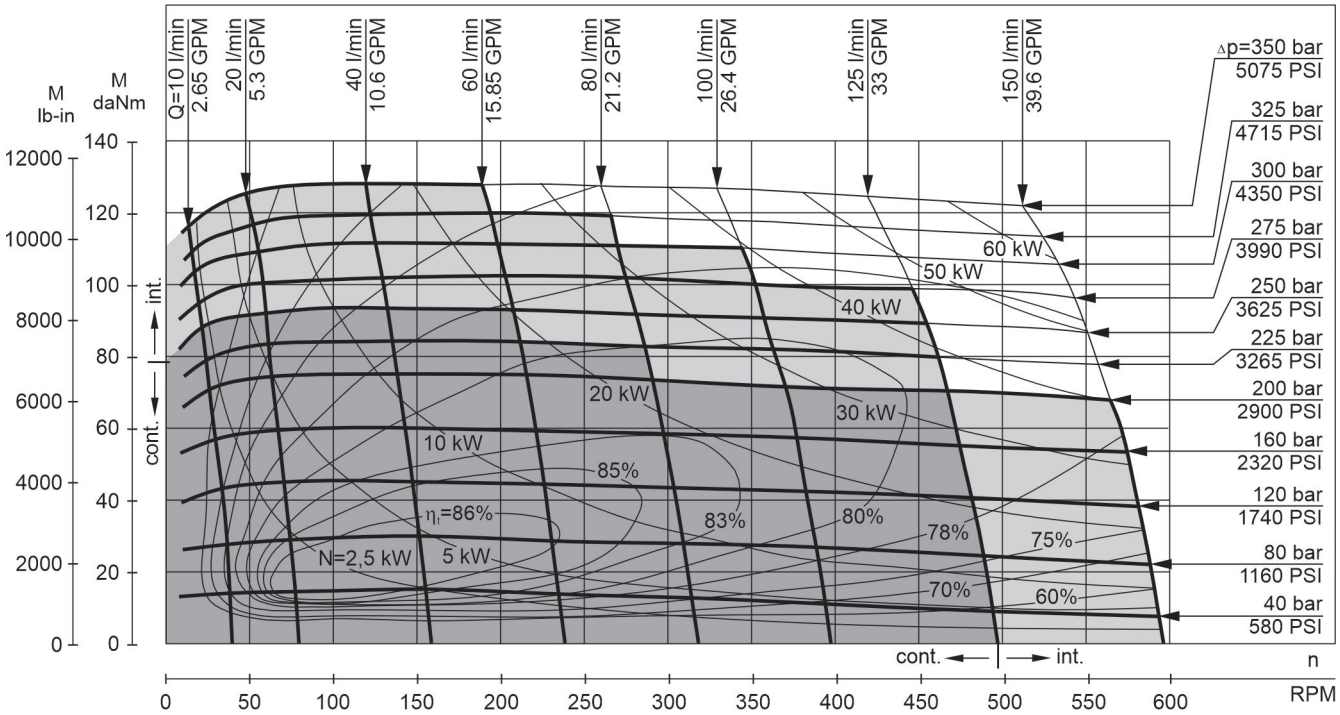


The function diagrams data is for average performance of randomly selected motors at back pressure 5÷10 bar [72.5 PSI÷145 PSI] and oil with viscosity of 32 mm²/s [150 SUS] at 50°C [122°F].

# FUNCTION DIAGRAMS

## MTM 315

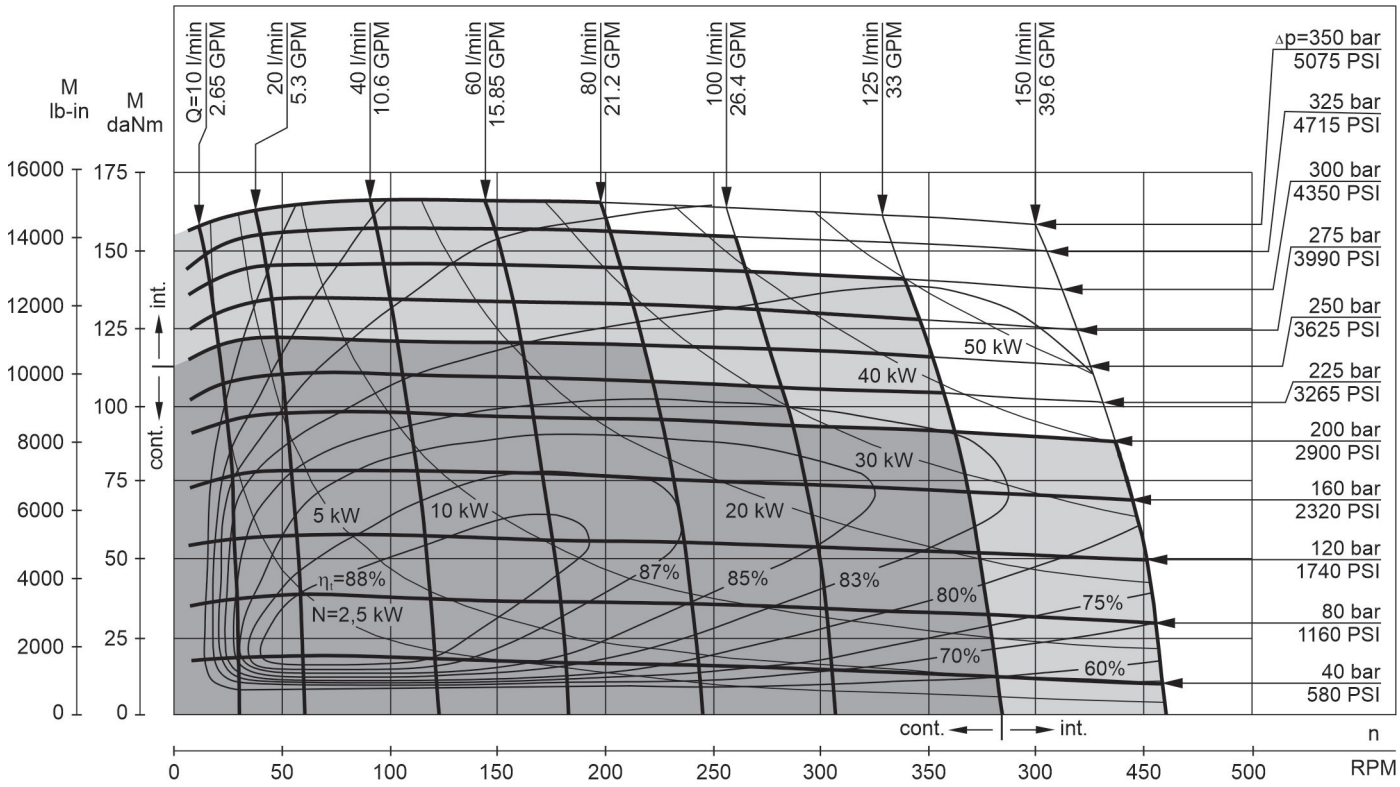


## MTM 400

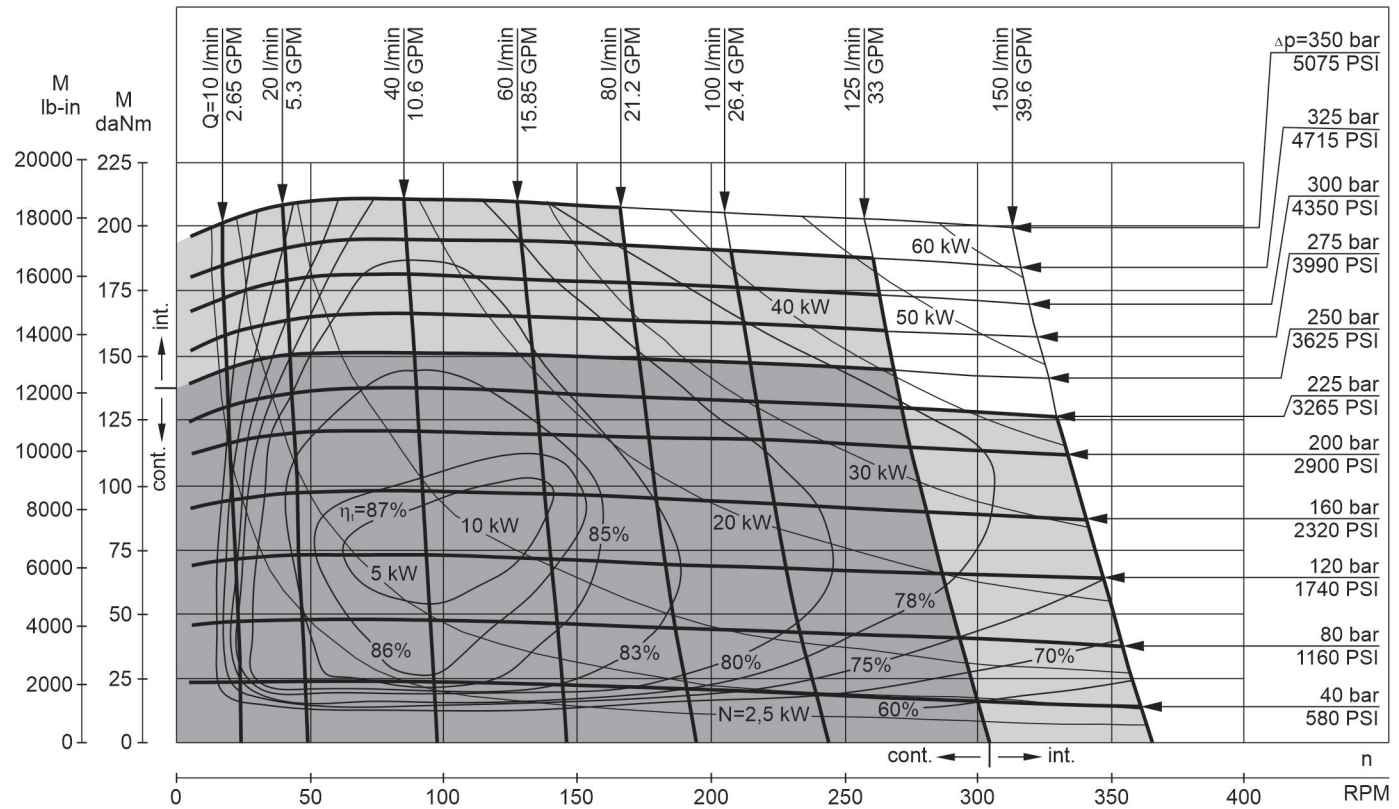


The function diagrams data is for average performance of randomly selected motors at back pressure 5÷10 bar [72.5 PSI÷145 PSI] and oil with viscosity of 32 mm²/s [150 SUS] at 50°C [122°F].

# FUNCTION DIAGRAMS

## MTM 470

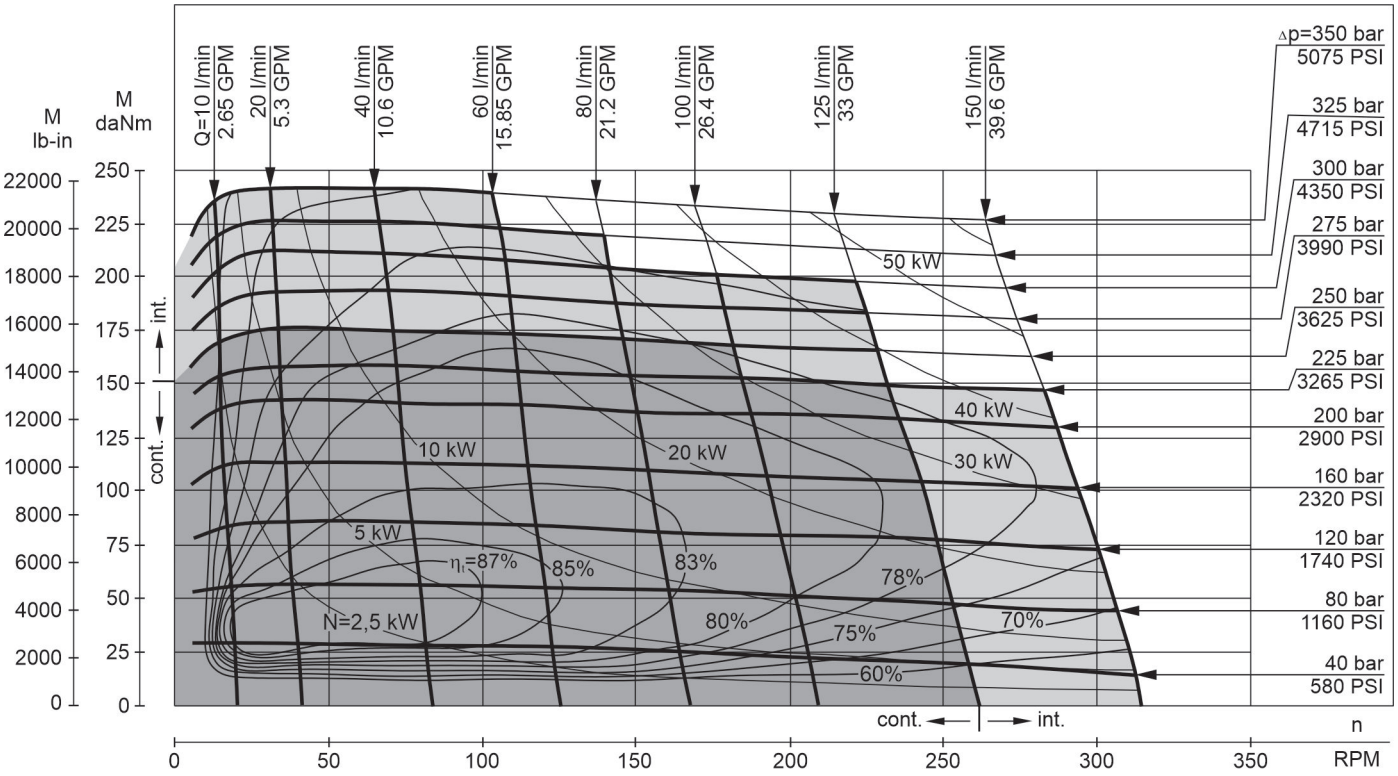


## MTM 500

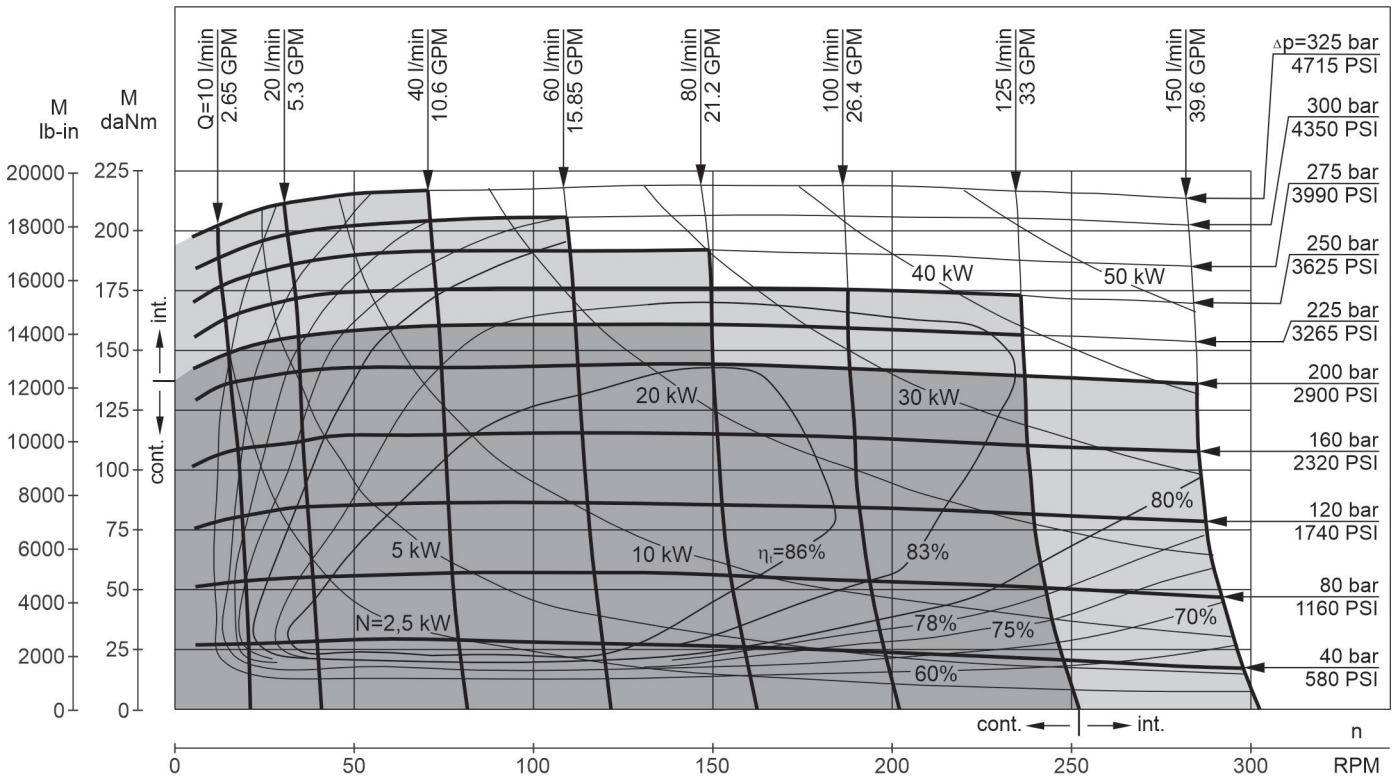


The function diagrams data is for average performance of randomly selected motors at back pressure 5÷10 bar [72.5 PSI÷145 PSI] and oil with viscosity of 32 mm²/s [150 SUS] at 50°C [122°F].

# FUNCTION DIAGRAMS

## MTM 630

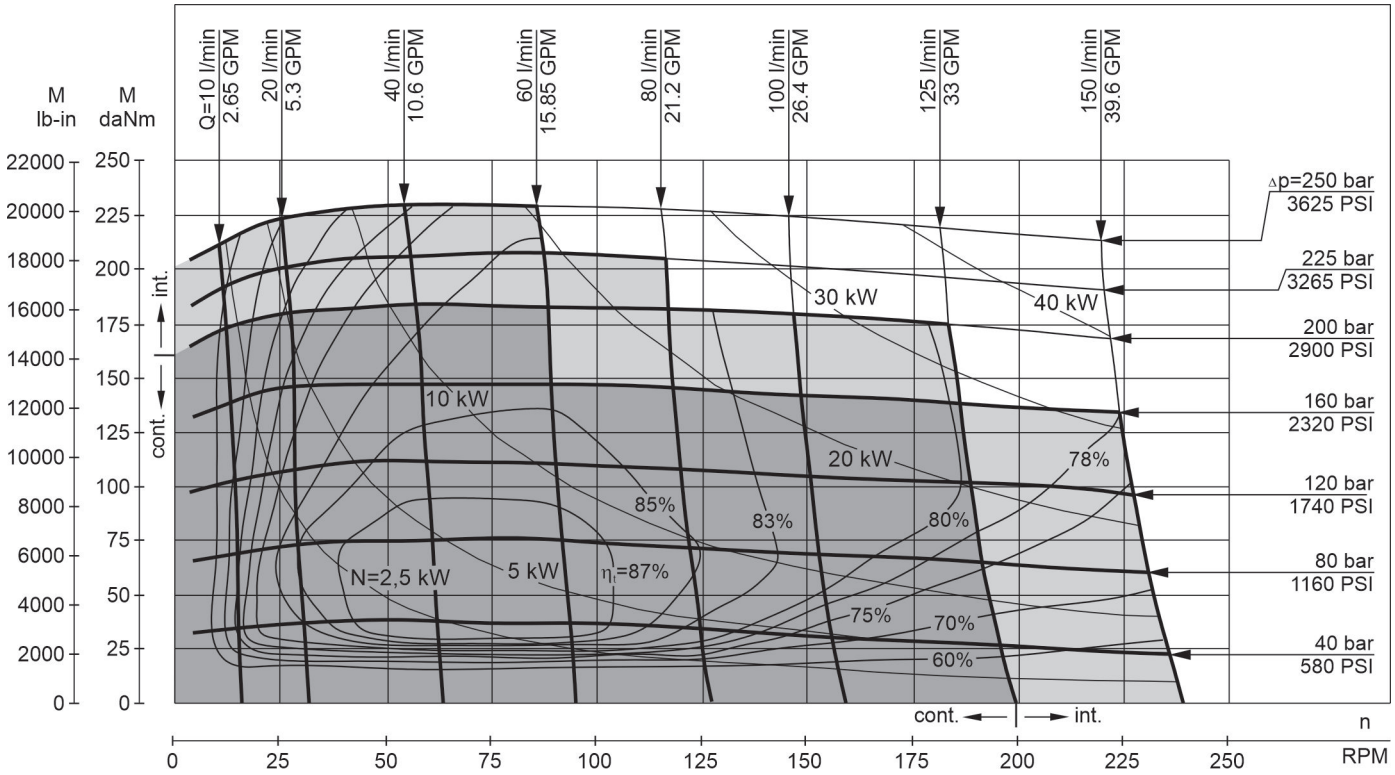


## MTM 725

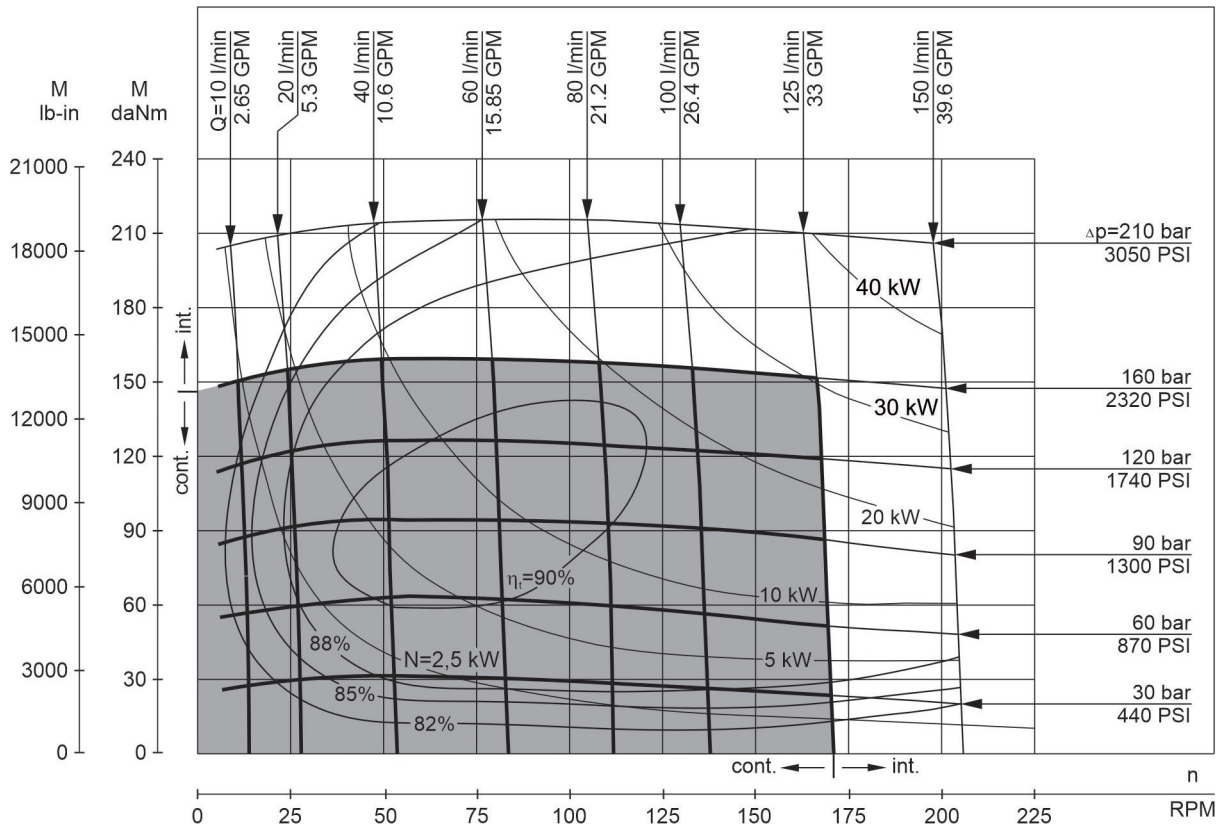


The function diagrams data is for average performance of randomly selected motors at back pressure 5÷10 bar [72.5 PSI÷145 PSI] and oil with viscosity of 32 mm²/s [150 SUS] at 50°C [122°F].

## DIMENSIONS and MOUNTING DATA for MTM and MTMC - versions ..., 4, 5

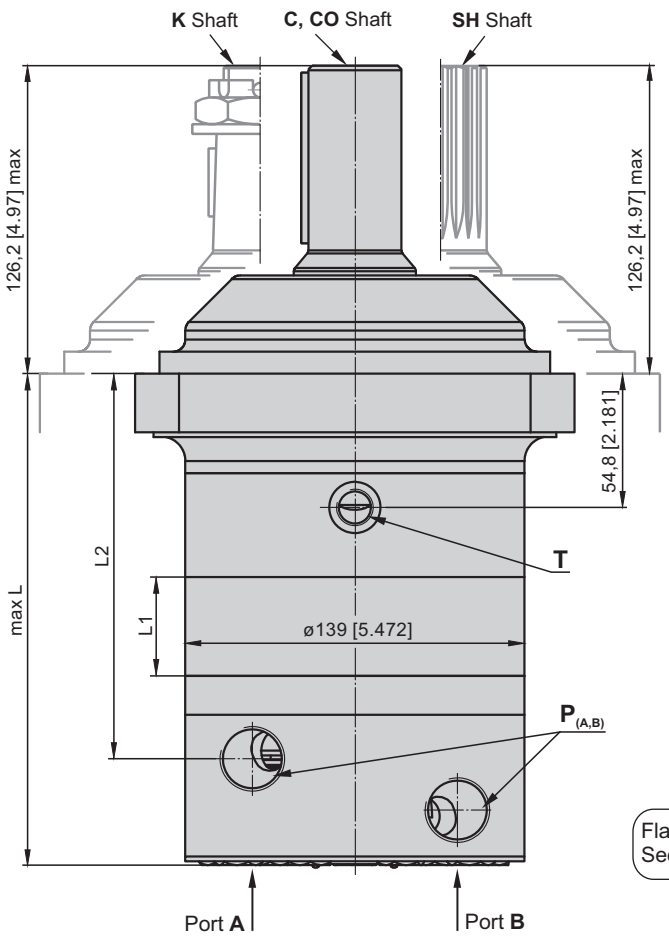


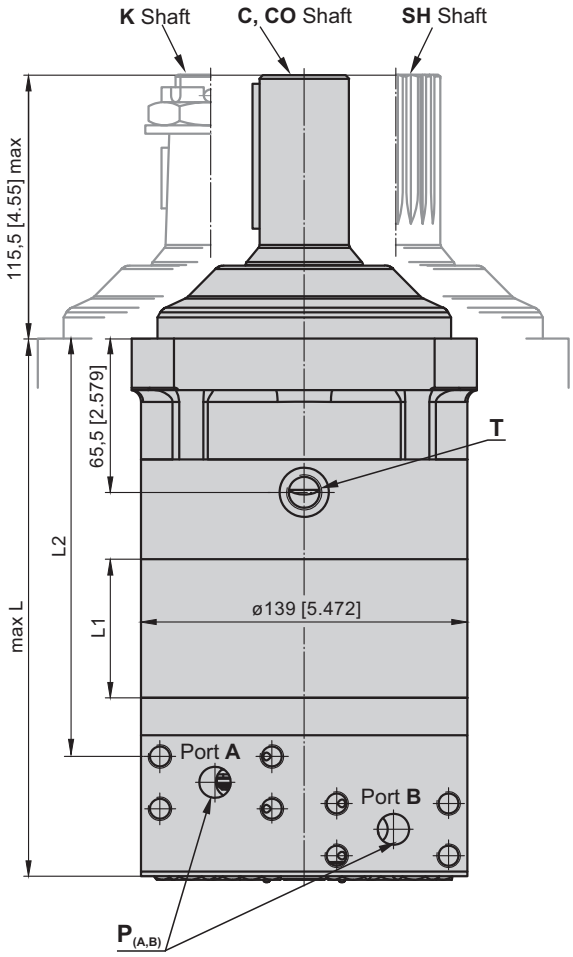


Flange Dim.
See Page 27

Shaft Dim.
See Page 29

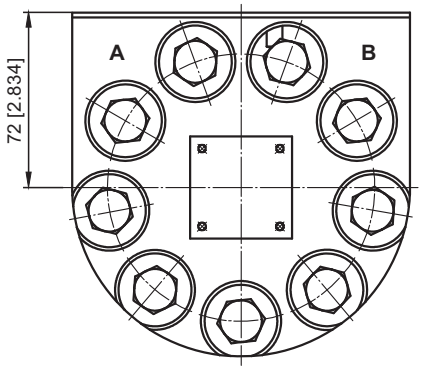


**Warning:** Drain line should always be used (if no check valves)!

mm [in]

| | Versions | | |
|---|---|---|---|
| | - | 4 | 5 |
| $P_{(A,B)}$ | 2xG3/4<br>17 mm [.67] depth | 2x1 1/16-12UN<br>O-ring<br>17 mm [.67] depth | 2x3/4"SAE PSI3000<br>with 8xM10 threads<br>10 mm [.39] depth |
| T | G1/4<br>12 mm [.47] depth | 9/16-18UN<br>13 mm [.51] depth | G1/4<br>12 mm [.47] depth |

**Standard Rotation**
Viewed from Shaft End
Port **A** Pressurized - **CW**
Port **B** Pressurized - **CCW**

**Reverse Rotation**
Viewed from Shaft End
Port **A** Pressurized - **CCW**
Port **B** Pressurized - **CW**

| Type | L, mm [in] | $L_2$, mm [in] | Type | L, mm [in] | $L_2$, mm [in] | Type | L, mm [in] | $L_2$, mm [in] | Type | L, mm [in] | $L_3$, mm [in] | $L_1$, mm [in] |
|---|---|---|---|---|---|---|---|---|---|---|---|---|
| MTM200 ...,4 | 188 [7.40] | 142,3 [5.60] | MTMC200 ...,4 | 198 [7.79] | 153 [6.02] | MTM200 5 | 188 [7.40] | 133,5 [5.26] | MTMC200 5 | 198 [7.79] | 144 [5.67] | 25 [.98] |
| MTM250 ...,4 | 194 [7.64] | 148,6 [5.85] | MTMC250 ...,4 | 204,5 [8.05] | 159,3 [6.27] | MTM250 5 | 194 [7.64] | 139,5 [5.49] | MTMC250 5 | 204,3 [8.04] | 150,3 [5.92] | 31,3 [1.23] |
| MTM315 ...,4 | 203 [7.99] | 157,8 [6.21] | MTMC315 ...,4 | 213,5 [8.40] | 168,5 [6.63] | MTM315 5 | 203 [7.99] | 149,0 [5.87] | MTMC315 5 | 213,5 [8.41] | 159,5 [6.28] | 40,5 [1.59] |
| MTM400 ...,4 | 214 [8.43] | 168,3 [6.63] | MTMC400 ...,4 | 224 [8.82] | 179 [7.04] | MTM400 5 | 214 [8.43] | 159,5 [6.28] | MTMC400 5 | 224 [8.82] | 170 [6.69] | 51 [2.01] |
| MTM470 ...,4 | 222 [8.74] | 176,3 [6.94] | MTMC470 ...,4 | 232 [9.13] | 187 [7.36] | MTM470 5 | 222 [8.74] | 167,5 [6.59] | MTMC470 5 | 232 [9.13] | 178 [7.01] | 59 [2.32] |
| MTM500 ...,4 | 228 [8.98] | 182,3 [7.18] | MTMC500 ...,4 | 238 [9.37] | 193 [7.60] | MTM500 5 | 228 [8.98] | 173,5 [6.83] | MTMC500 5 | 238 [9.37] | 184 [7.24] | 65 [2.56] |
| MTM630 ...,4 | 224 [8.82] | 178,3 [7.02] | MTMC630 ...,4 | 234 [9.21] | 189 [7.44] | MTM630 5 | 224 [8.82] | 169,5 [6.67] | MTMC630 5 | 234 [9.21] | 180 [7.09] | 61 [2.40] |
| MTM725 ...,4 | 233 [9.17] | 187,3 [7.37] | MTMC725 ...,4 | 243 [9.56] | 198 [7.79] | MTM725 5 | 233 [9.17] | 178,5 [7.03] | MTMC725 5 | 243 [9.57] | 189 [7.44] | 70 [2.76] |

## DIMENSIONS and MOUNTING DATA for MTMW - versions ... and 4

Flange Dim.
See Page 27

Shaft Dim.
See Page 29

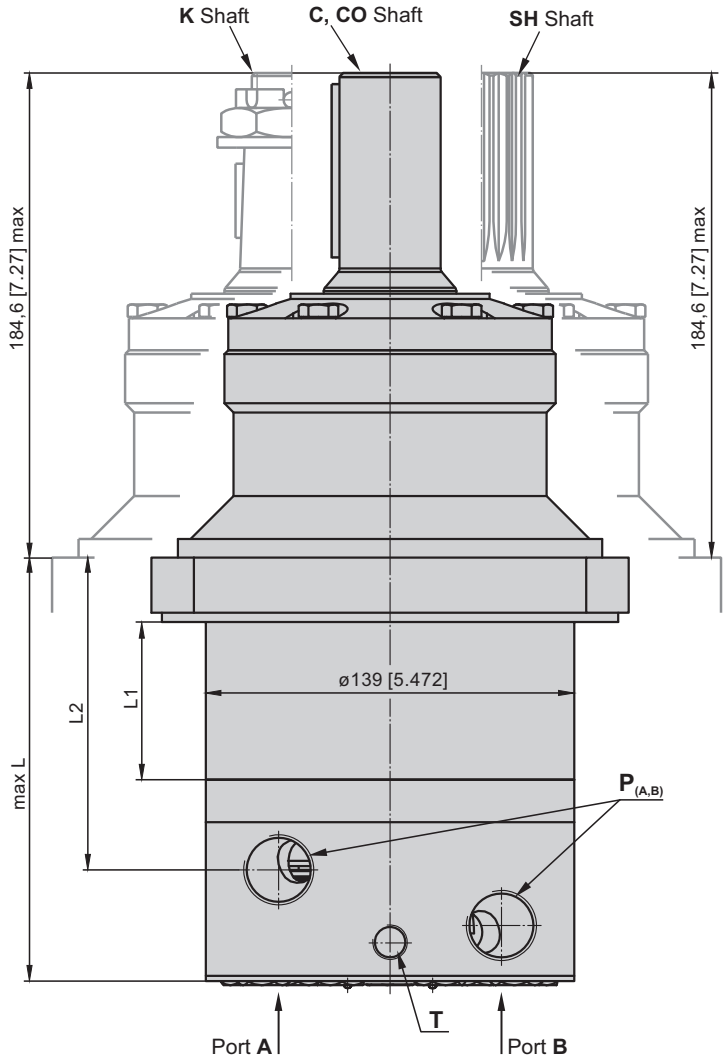


**Warning:** Drain line should always be used (if no check valves)!

**Standard Rotation**
Viewed from Shaft End
Port **A** Pressurized - **CW**
Port **B** Pressurized - **CCW**

**Reverse Rotation**
Viewed from Shaft End
Port **A** Pressurized - **CCW**
Port **B** Pressurized - **CW**

| | Versions | |
|---|---|---|
| | - | 4 |
| $P_{(A,B)}$ | 2xG3/4<br>17 mm [.67] depth | 2x1 1/16-12UN<br>O-ring<br>17 mm [.67] depth |
| T | G1/4<br>12 mm [.47] depth | 9/16-18UN<br>13 mm [.51] depth |

| Type | L, mm [in] | $L_2$, mm [in] | $L_1$, mm [in] |
|---|---|---|---|
| MTMW 200 ...,4 | 129 [5.08] | 83,8 [3.30] | 25 [.98] |
| MTMW 250 ...,4 | 135 [5.32] | 90,1 [3.55] | 31,3 [1.23] |
| MTMW 315 ...,4 | 144 [5.67] | 99,3 [3.91] | 40,5 [1.59] |
| MTMW 400 ...,4 | 155 [6.10] | 109,8 [4.32] | 51 [2.01] |
| MTMW 470 ...,4 | 163 [6.42] | 117,8 [4.64] | 59 [2.32] |
| MTMW 500 ...,4 | 169 [6.65] | 123,8 [4.87] | 65 [2.56] |
| MTMW 630 ...,4 | 165 [6.50] | 119,8 [4.72] | 61 [2.40] |
| MTMW 725 ...,4 | 174 [6.85] | 128,8 [5.07] | 70 [2.76] |

mm [in]

# MOUNTING

4-Bolt flange
spigot diameter ø160 mm [6.3 in] - BC ø200 mm [7.874 in]

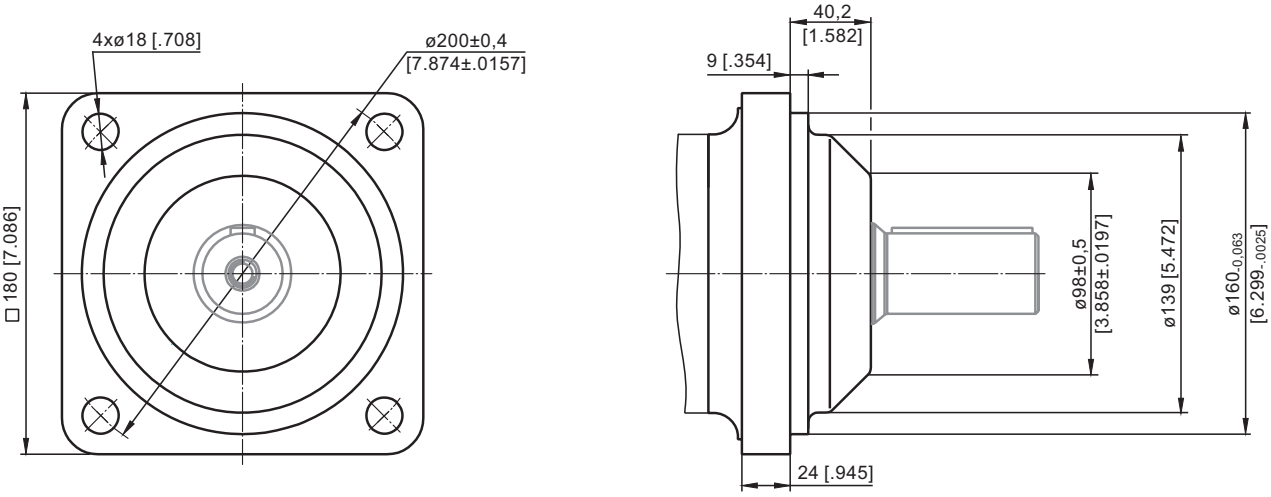


**C** 4-Bolt flange
spigot diameter ø125 mm [4.921 in] - BC ø160 mm [6.3 in]

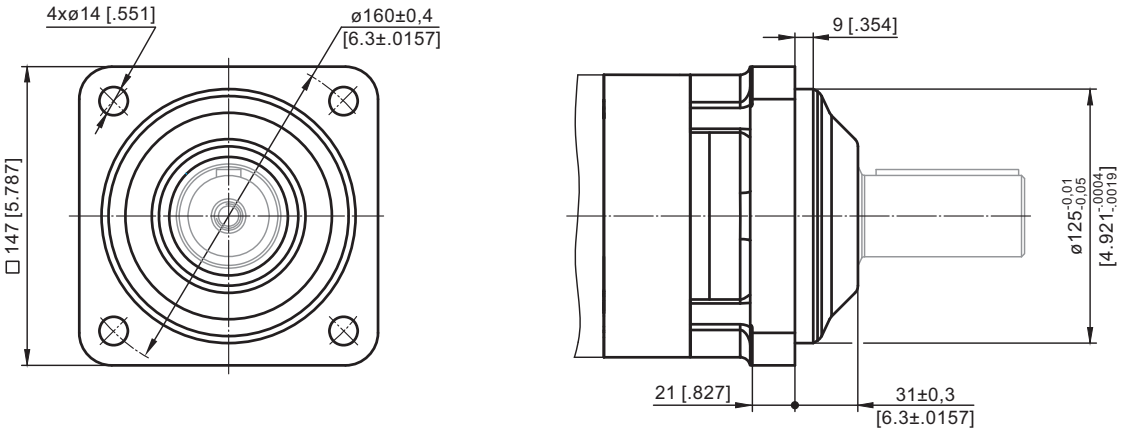


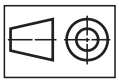

mm [in]

**W** 4-Bolt flange, Wheel Motor
spigot diameter ø160 mm [6.3 in] - BC ø200 mm [7.874 in]

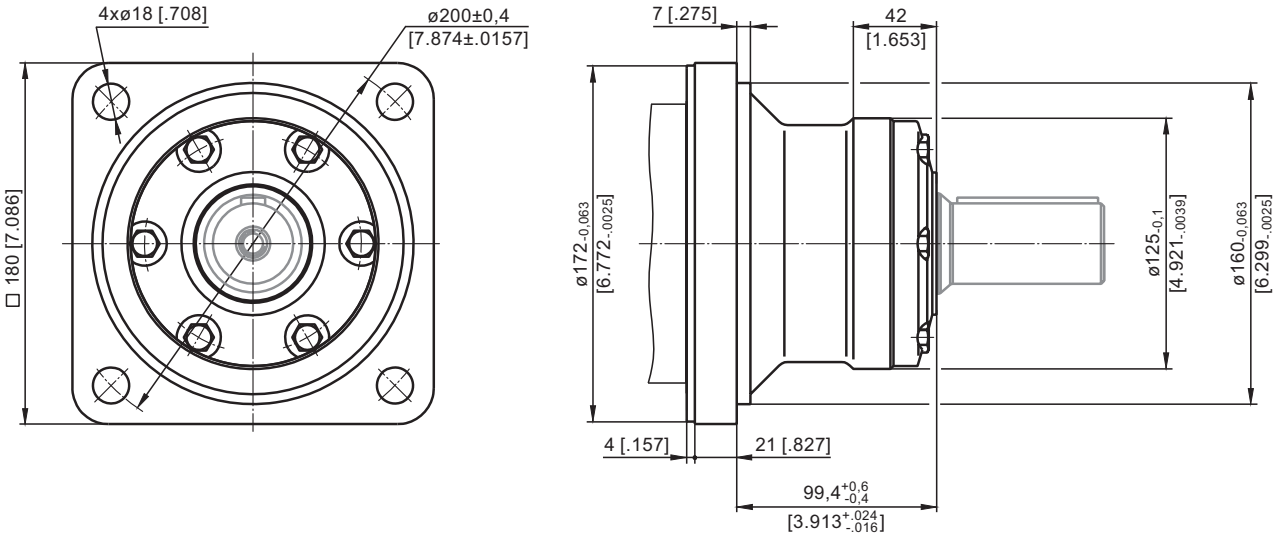

## PORTS

Versions [-] [4]

For **MTM** and **MTMC**

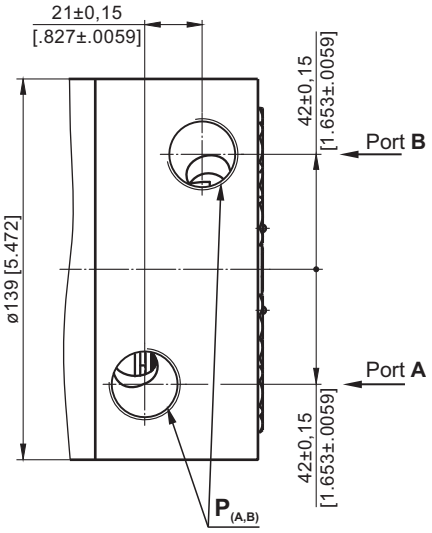


For **MTMW**

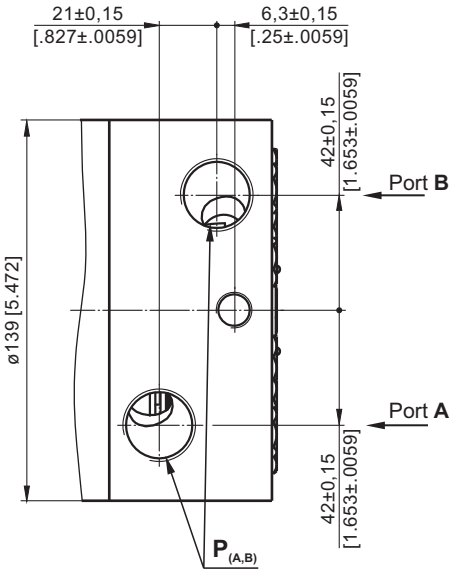


Version [5]

For **MTM** and **MTMC**

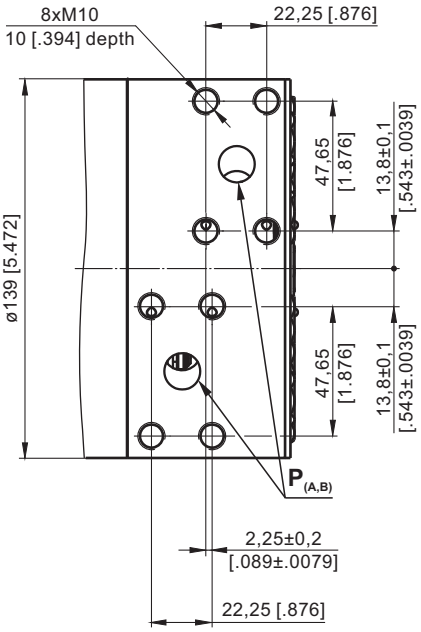


| | Versions | | |
|---|---|---|---|
| | - | [4] | [5] |
| $P_{(A,B)}$ | 2xG3/4<br>17 mm [.67] depth | 2x1 1/16-12UN<br>O-ring<br>17 mm [.67] depth | 2x3/4"SAE PSI3000<br>with 8xM10 threads<br>10 mm [.39] depth |
| T | G1/4<br>12 mm [.47] depth | 9/16-18UN<br>13 mm [.51] depth | G1/4<br>12 mm [.47] depth |

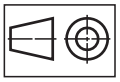

mm [in]

## MAX. PERMISSIBLE SHAFT SEAL PRESSURE

**Max. return pressure without drain line or max. pressure in the drain line**

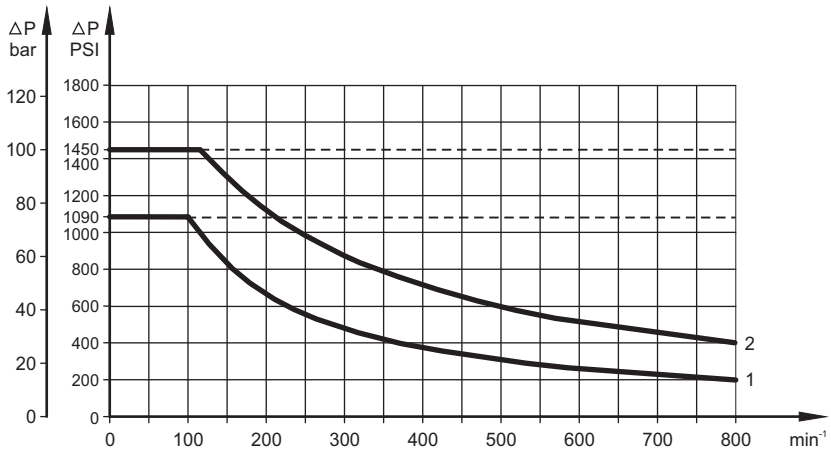


1: Drawing for Standard Shaft Seal

2: Drawing for High Pressure Seal ("**U**" Seal)

——— - continuous operations

- - - - - - intermittent operations

## SHAFT EXTENSIONS

**C** - ø40 straight, Parallel key A12x8x70 DIN 6885
Max. Torque 132,8 daNm [11755 lb-in]

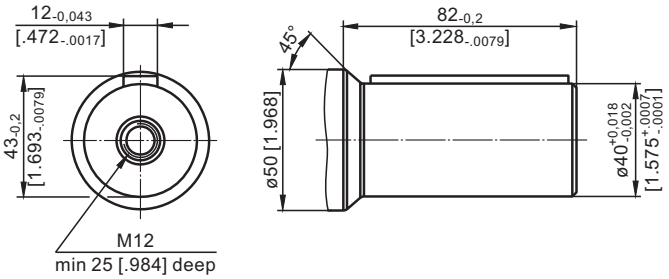


**SH** - ø1½" splined 17T, DP 12/24 ANSI B92.1-1976
Max. Torque 132,8 daNm [11755 lb-in]

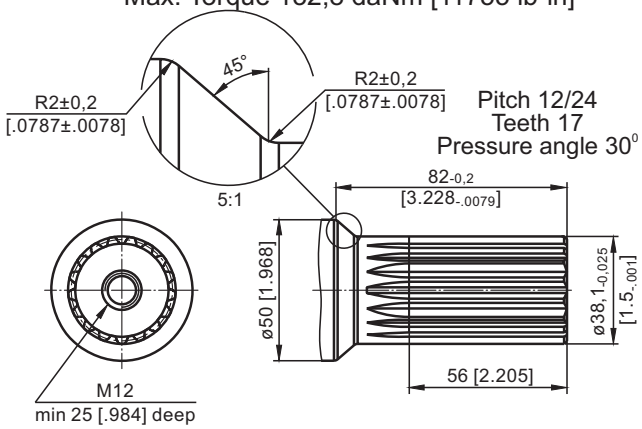


**CO** - ø1½" straight, Parallel key ⅜"x⅜"x 2¼" BS46
Max. Torque 132,8 daNm [11755 lb-in]

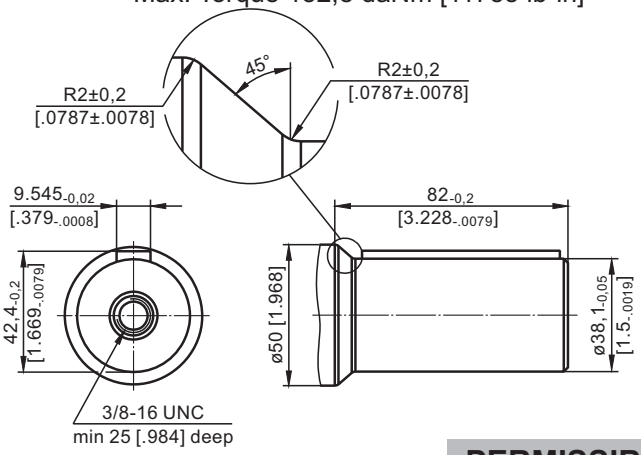


**K** - tapered 1:10, Parallel key B12x8x28 DIN 6885
Max. Torque 210,7 daNm [18650 lb-in]

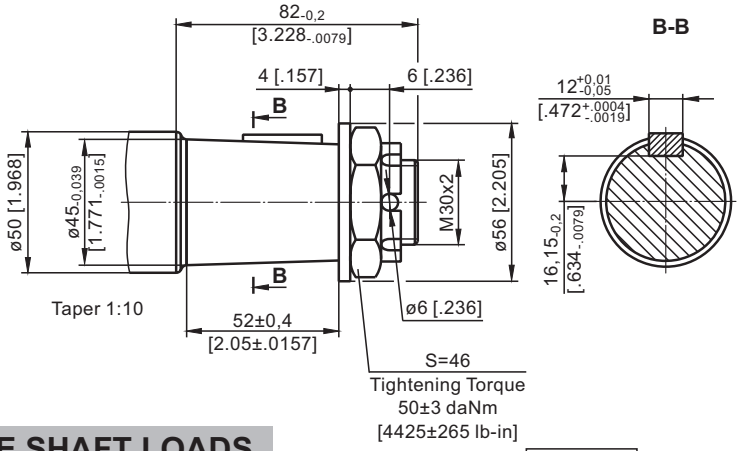


## PERMISSIBLE SHAFT LOADS

The curves apply to a B10 bearing life (ISO281) of 2000 hours at 200 RPM.

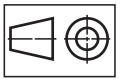

mm [in]

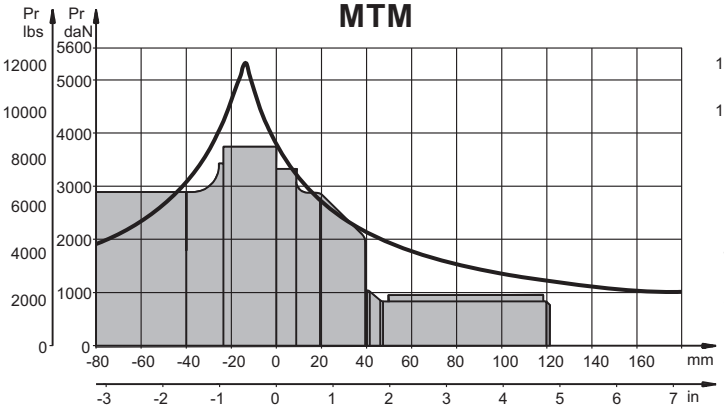


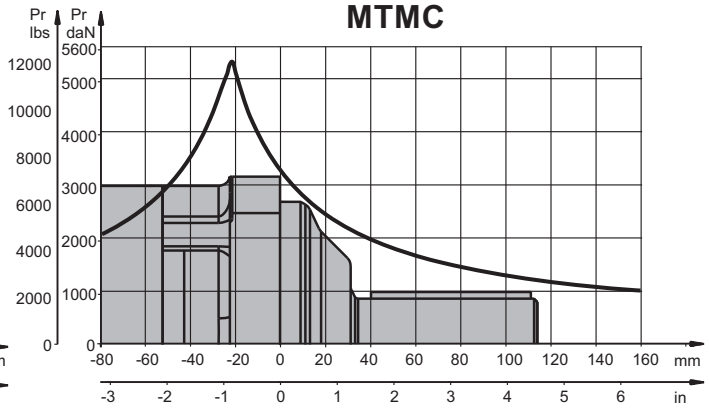


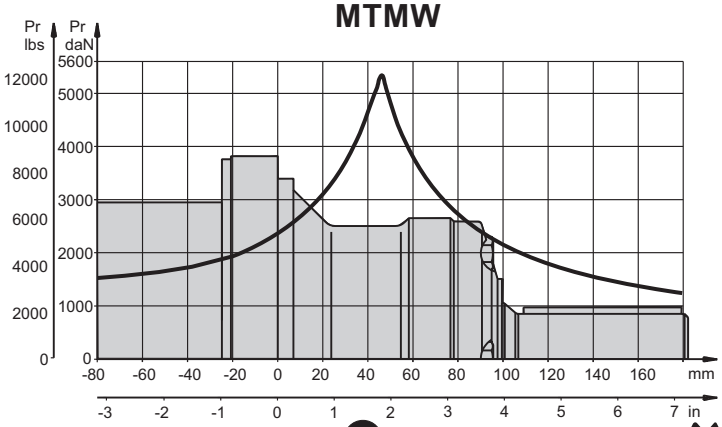

# DIMENSIONS and MOUNTING DATA for MTMV

## MTMV... and MTMV...4

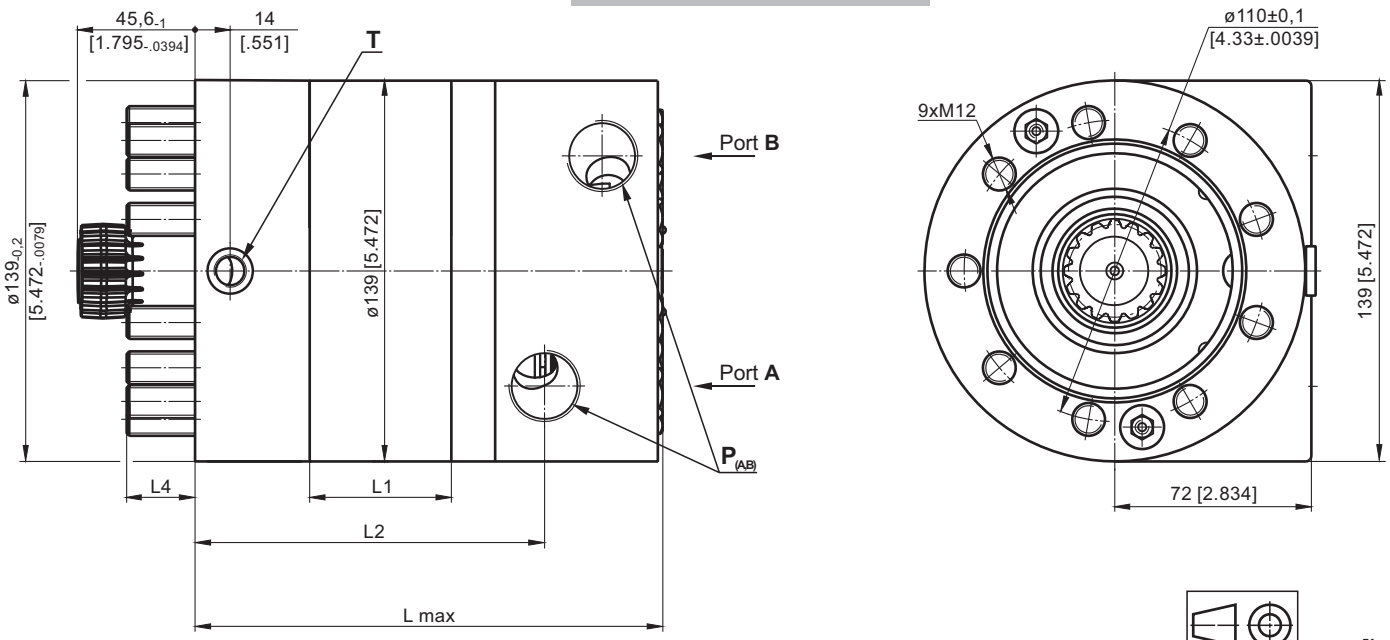


mm [in]

## MTMV...5

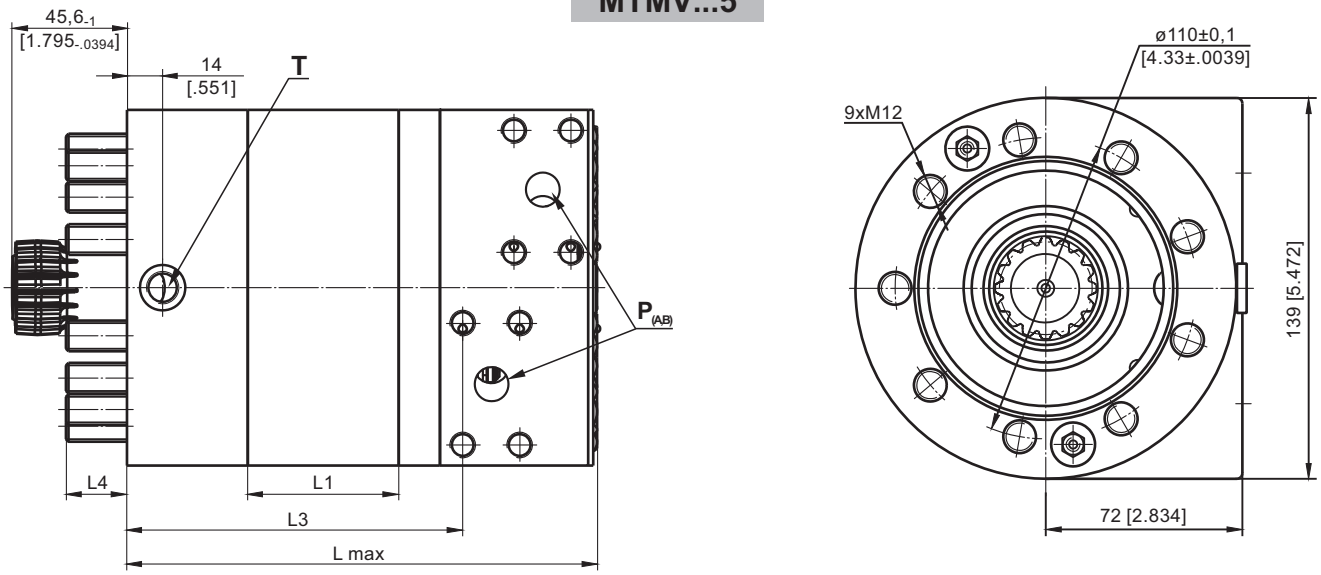


**Warning:** Drain line should always be used (if no check valves)

**Standard Rotation**
Viewed from Shaft End
Port **A** Pressurized - **CW**
Port **B** Pressurized - **CCW**

**Reverse Rotation**
Viewed from Shaft End
Port **A** Pressurized - **CCW**
Port **B** Pressurized - **CW**

| | Versions | | |
|---|---|---|---|
| | - | 4 | 5 |
| $P_{(A,B)}$ | 2xG3/4<br>17 mm [.67] depth | 2x1 1/16-12UN O-ring<br>17 mm [.67] depth | 2x3/4"SAE PSI3000 with 8xM10 threads<br>10 mm [.39] depth |
| T | G1/4<br>12 mm [.47] depth | 9/16-18UN<br>13 mm [.51] depth | G1/4<br>12 mm [.47] depth |

| Type | L, mm [in] | $L_2$, mm [in] | $L_3$, mm [in] | $L_4$, mm [in] | $L_1$, mm [in] |
|---|---|---|---|---|---|
| MTMV 200 | 151 [5.945] | 106,5 [4.193] | 97,2 [3.827] | 27,8 [1.094] | 25,0 [ .98] |
| MTMV 250 | 157 [6.181] | 112,8 [4.441] | 103,5 [4.075] | 26,5 [1.043] | 31,3 [1.23] |
| MTMV 315 | 167 [6.575] | 122,0 [4.803] | 112,7 [4.437] | 22,3 [ .878] | 40,5 [1.59] |
| MTMV 400 | 177 [6.968] | 132,5 [5.217] | 123,2 [4.850] | 21,8 [ .858] | 51,0 [2.01] |
| MTMV 470 | 185 [7.283] | 140,5 [5.531] | 131,2 [5.165] | 23,8 [ .937] | 59,0 [2.32] |
| MTMV 500 | 191 [7.520] | 146,5 [5.768] | 137,2 [5.402] | 27,8 [1.094] | 65,0 [2.56] |
| MTMV 630 | 187 [7.362] | 142,5 [5.610] | 133,2 [5.244] | 21,8 [ .858] | 61,0 [2.40] |
| MTMV 725 | 196 [7.717] | 151,5 [5.965] | 142,2 [5.598] | 22,8 [ .898] | 70,0 [2.76] |

# DIMENSIONS and MOUNTING DATA for MTM6V

## MTM6V... and MTM6V...4

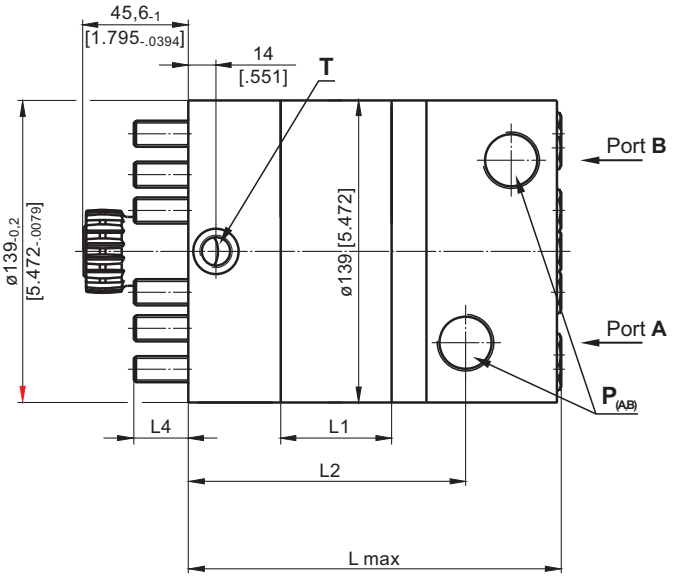


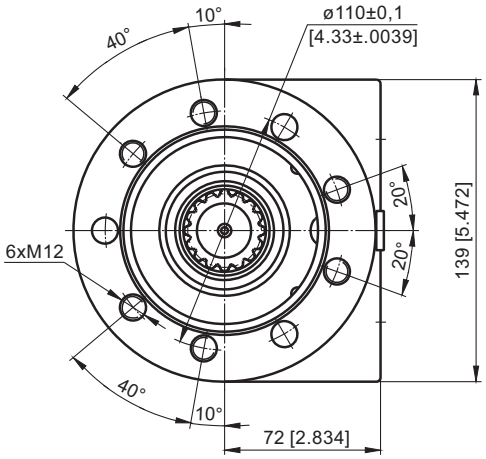


Fig.1

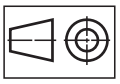

mm [in]

## MTM6V...5

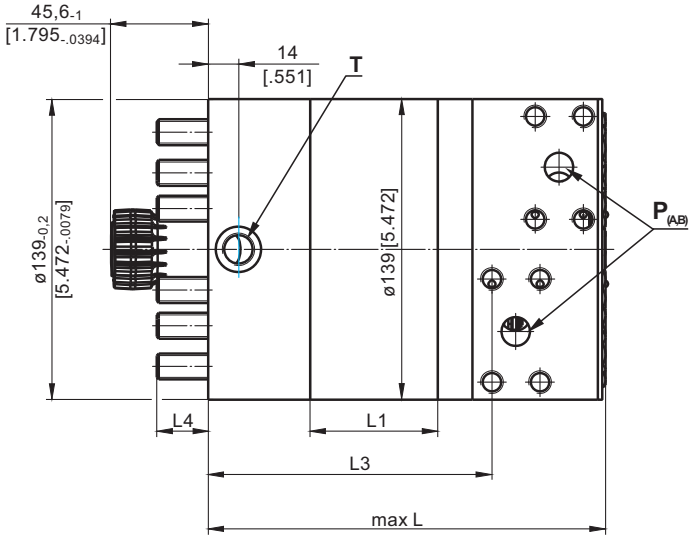


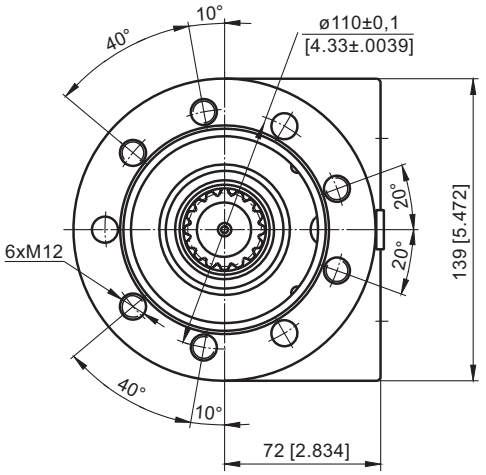


Fig.1

**Warning:** Drain line should always be used (if no check valves)

**Standard Rotation**
Viewed from Shaft End
Port **A** Pressurized - **CW**
Port **B** Pressurized - **CCW**

**Reverse Rotation**
Viewed from Shaft End
Port **A** Pressurized - **CCW**
Port **B** Pressurized - **CW**

| | Versions | | |
|---|---|---|---|
| | - | 4 | 5 |
| $P_{(A,B)}$ | 2xG3/4<br>17 mm [.67] depth | 2x1 1/16-12UN O-ring<br>17 mm [.67] depth | 2x3/4"SAE PSI3000 with 8xM10 threads<br>10 mm [.39] depth |
| T | G1/4<br>12 mm [.47] depth | 9/16-18UN<br>13 mm [.51] depth | G1/4<br>12 mm [.47] depth |

| Type | L, mm [in] | $L_2$, mm [in] | $L_3$, mm [in] | $L_4$, mm [in] | $L_1$, mm [in] |
|---|---|---|---|---|---|
| MTM6V 200... | 151 [5.945] | 106,5 [4.193] | 97,2 [3.827] | 27,8 [1.094] | 25 [.98] |
| MTM6V 250... | 157 [6.181] | 112,8 [4.441] | 103,5 [4.075] | 26,5 [1.043] | 31,3 [1.23] |
| MTM6V 315... | 167 [6.575] | 122,0 [4.803] | 112,7 [4.437] | 22,3 [.878] | 40,5 [1.59] |
| MTM6V 400... | 177 [6.968] | 132,5 [5.217] | 123,2 [4.850] | 21,8 [.858] | 51 [2.01] |
| MTM6V 470... | 185 [7.283] | 140,5 [5.531] | 131,2 [5.165] | 23,8 [.937] | 59 [2.32] |
| MTM6V 500... | 191 [7.520] | 146,5 [5.768] | 137,2 [5.402] | 27,8 [1.094] | 65 [2.56] |
| MTM6V 630... | 187 [7.362] | 142,5 [5.610] | 133,2 [5.244] | 21,8 [.858] | 61 [2.40] |
| MTM6V 725... | 196 [7.717] | 151,5 [5.965] | 142,2 [5.598] | 22,8 [.898] | 70 [2.76] |

## DIMENSIONS of THE ATTACHED COMPONENT

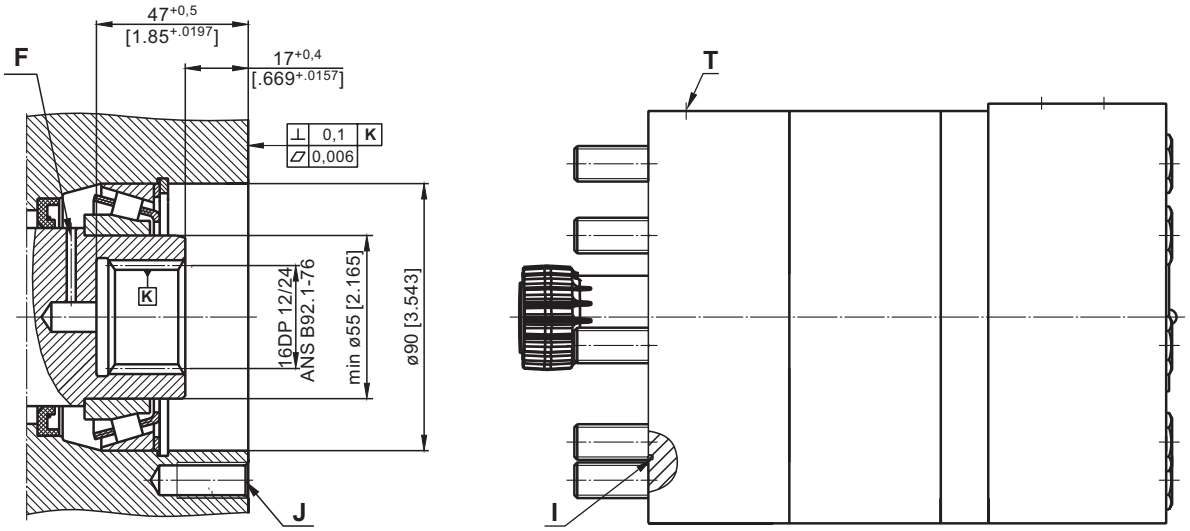


**F**: Oil circulation hole
**J**: 9xM12 - 30 mm [1.181 in] depth, 40$^0$, ø110±0,1 [4.33±.0039]
**I** : O-Ring 93x1,5 mm [3.661x.059 in]
**T**: Drain connection G1/4

## DIMENSIONS of THE ATTACHED COMPONENT for MTM6V

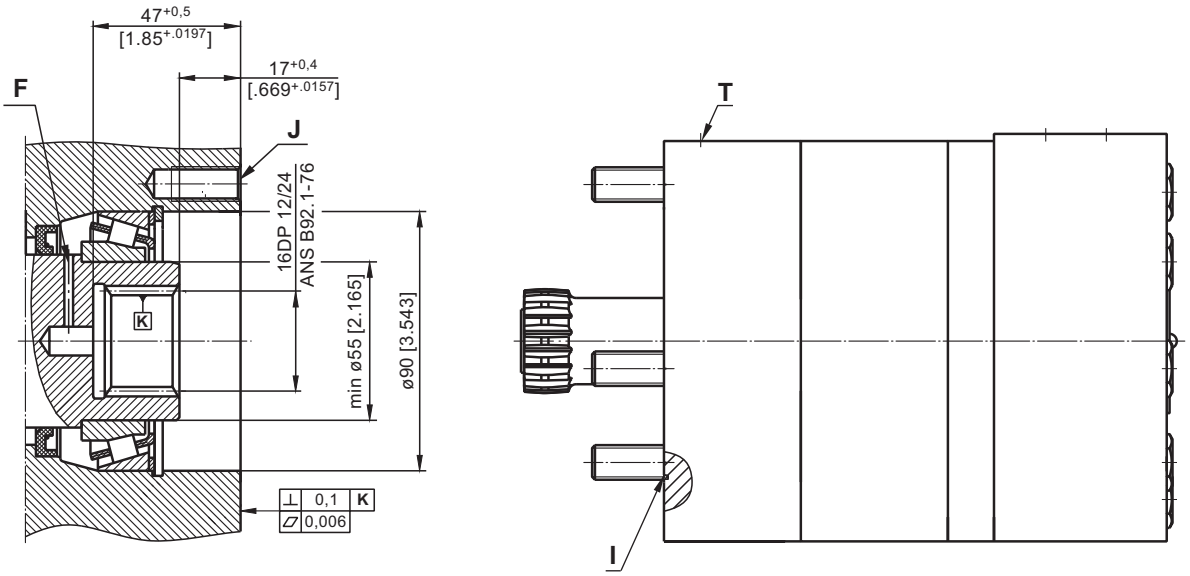


**F**: Oil circulation hole
**J**: 9xM12 - 30 mm [1.181 in] depth, 40$^0$, ø110±0,1 mm [4.33±.0039 in] or 6xM12 - 30 mm [1.181 in] depth, situated in accordance with the bolts M12, shown on Fig.1, ø110±0,1 mm [4.33±.0039 in]
**I** : O-Ring 93x1,5 mm [3.661x.059 in]
**T**: Drain connection G1/4

mm [in]

## DRAIN CONNECTION

A drain line ought to be used when pressure in the return line can exceed the permissible pressure. It can be connected at the drain connection of the attached component. The maximum pressure in the drain line is limited by the attached component and its shaft seal.

The drain line must be possible for oil to flow freely between motor and attached component and must be led to the tank. The maximum pressure in the drain line is limited by the attached component and its seal.

## INTERNAL SPLINE DATA for the ATTACHED COMPONENT

*Standard ANS B92.1-1976, class 5*
*[m=2.1166; corrected x.m=+1,0]*

| Fillet Root Side Fit | | inch | mm |
|---|---|---|---|
| Number of Teeth | z | 16 | 16 |
| Diametral Pitch | DP | 12/24 | 12/24 |
| Pressure Angle | | $30^0$ | $30^0$ |
| Pitch Dia. | D | 1.3333 | 33,8656 |
| Major Dia. | Dri | 1.5118÷1.5275 | $38{,}4^{+0{,}4}$ |
| Minor Dia. | Di | 1.2657÷1.2673 | $32{,}15^{+0{,}04}$ |
| Circular Space Width | Lo | .1763÷.1791 | 4,516±0,037 |
| Fillet Radius | R | .02 | 0,5 |
| Dimension Between Two Pins | L | 1.063÷1.059 | $26{,}9^{+0{,}10}$ |
| Pin Dia. | d | .19026÷.19034 | 4,835±0,001 |

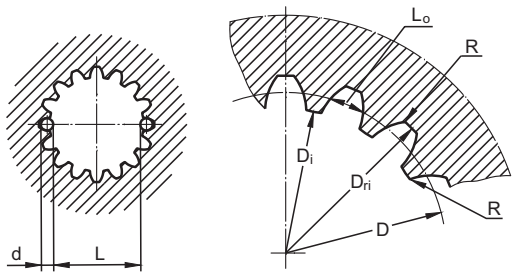


*Hardening Specification:*
HV=750±50 on the surface.
HV=560 at 0,7±0,2 [.035÷.019] case depth
Material: 20 MoCr4 EN 10084 or SAE8620.

## ORDER CODE

| | 1 | 2 | 3 | 4 | 5 | 6 | 7 | 8 |
|---|---|---|---|---|---|---|---|---|
| **M T M** | | | | | | | **HD** | |

**Pos.1 - Mounting Flange**

- omit - 4-Bolt flange, spigot dia. ø160, BC ø200
- **C** - 4-Bolt flange, spigot dia. ø125, BC ø160
- **W*** - Wheel motor
- **V** - Very short mount, 9xM12 mounting bolts
- **6V** - Very short mount, 6xM12 mounting bolts

**Pos.2 - Displacement code**

- **200** - 201,4 $cm^3$/rev [12.29 $in^3$/rev]
- **250** - 251,8 $cm^3$/rev [15.36 $in^3$/rev]
- **315** - 326,3 $cm^3$/rev [19.90 $in^3$/rev]
- **400** - 410,9 $cm^3$/rev [25.06 $in^3$/rev]
- **470** - 475,0 $cm^3$/rev [28.97 $in^3$/rev]
- **500** - 523,6 $cm^3$/rev [31.95 $in^3$/rev]
- **630** - 631,2 $cm^3$/rev [38.52 $in^3$/rev]
- **725** - 724,3 $cm^3$/rev [44.20 $in^3$/rev]

**Pos.3 - Shaft Extensions****

- **C** - ø40 straight, Parallel key A12x8x70 DIN6885
- **CO** - ø1½" straight, Parallel key $^3/_8$"x$^3/_8$"x2¼" BS46
- **K** - ø45 tapered 1:10, Parallel key B12x8x28 DIN6885
- **SH** - ø1½" splined 17T ANSI B92.1-1976

**Pos.4 - Shaft Seal Version*** (see page 31)**

- omit - Low pressure seal
- **U** - High pressure seal

**Pos.5 - Ports**

- omit - 2xG3/4, G1/4, BSPP (ISO 228)
- **4** - 2x$1^1/_{16}$-12 UN, O-ring, $^9/_{16}$-18 UNF
- **5** - 2x3/4"SAE PSI3000 with 8xM10 threads, G1/4

**Pos.6 - Check Valves**

- omit - without check valves
- **1** - with check valves

**Pos.7 - Special Features**

- **HD** - Reinforced motor **HD***

For Other **Special Features** see page 69

**Pos.8 - Design Series**

- omit - Factory specified

**NOTES:**

* Not applicable for "5" version.
** The permissible output torque for shafts must be not exceeded!
*** Shaft seal is available with the "omit" and "W" mounting flange only!

The hydraulic motors are mangano-phosphatized as standard.

# HYDRAULIC MOTORS TMF

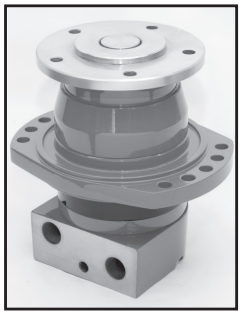

## APPLICATION

» Marine equipment
» Forestry equipment
» Metal working machines
» Agricultural machines
» Road building machines
» Mining machinery
» Special vehicles etc.

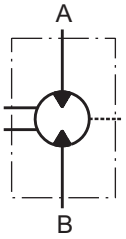


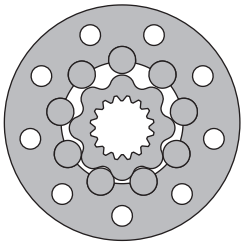

## CONTENTS

Specification data ..... 35
Function diagrams ..... 36÷39
Dimensions and mounting TMF..... 40
Dimensions and mounting TMFA ..... 41
Permissible shaft loads ..... 42
Order code ..... 42

## OPTIONS

» Model - Disc valve, roll-gerotor
» Wheel mounting flange
» Side ports
» Shaft - thread hole flange
» SAE and BSPP ports
» Other special features

## GENERAL

| | |
|---|---|
| **Max. Displacement,** $cm^3$/rev [$in^3$/rev] | 724 [44.2] |
| **Max. Speed,** [RPM] | 750 |
| **Max. Torque,** daNm [lb-in] | cont.: 175 [15490] int.: 217 [19206] |
| **Max. Output,** kW [HP] | 70 [94] |
| **Max. Pressure Drop,** bar [PSI] | cont.: 250 [3600] int.: 350 [5080] |
| **Max. Oil Flow,** lpm [GPM] | 150 [39.6] |
| **Min. Speed,** [RPM] | 5 |
| **Permissible Shaft Loads,** daN [lbs] | $P_a$=1000 [2250] |
| **Pressure fluid** | Mineral based- HLP(DIN 51524) or HM(ISO 6743/4) |
| **Temperature range,** $^oC$ [$^oF$] | -40÷140 [-40÷284] |
| **Optimal Viscosity range,** $mm^2$/s [SUS] | 20÷75 [98÷347] |
| **Filtration** | ISO code: 18/16/13 According to ISO 4406-1999 |

### Oil flow in drain line

| Pressure drop bar [PSI] | Viscosity $mm^2$/s [SUS] | Oil flow in drain line lpm [GPM] |
|---|---|---|
| 200 [2900] | 20 [98] | 2,5 [.660] |
| | 35 [164] | 1,5 [.400] |
| 275 [3990] | 20 [98] | 4 [1.057] |
| | 35 [164] | 2,5 [.660] |

### Pressure Losses

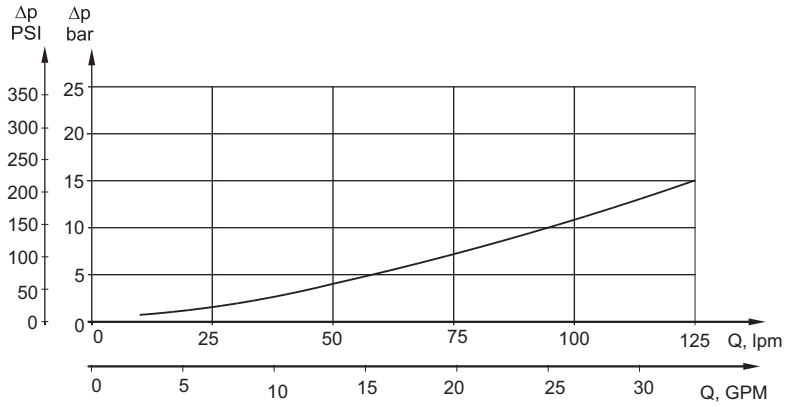

## SPECIFICATION DATA

| Type | | TMF 200 | TMF 250 | TMF 315 | TMF 400 | TMF 470 | TMF 500 | TMF 630 | TMF 725 |
|---|---|---|---|---|---|---|---|---|---|
| Displacement, $cm^3$/rev [$in^3$/rev] | | 201,4 [12.29] | 251,8 [15.36] | 326,3 [19.9] | 410,9 [25.06] | 475 [28.97] | 523,6 [31.95] | 631,2 [38.52] | 724 [44.2] |
| Max. Speed, [RPM] | Cont. | 625 | 500 | 380 | 305 | 260 | 240 | 190 | 170 |
| | Int.* | 750 | 600 | 460 | 365 | 315 | 285 | 230 | 210 |
| Max. Torque, daNm [lb-in] | Cont. | 74 [6550] | 90 [7965] | 116 [10265] | 147 [13010] | 171 [15135] | 172 [15225] | 175 [15490] | 160 [14160] |
| | Int.* | 102 [9030] | 128 [11330] | 163 [14425] | 206 [18232] | 217 [19206] | 217 [19206] | 217 [19206] | 192 [17000] |
| | Peak** | 115 [10180] | 144 [12745] | 186 [16460] | 235 [20800] | 240 [21240] | 240 [21240] | 250 [22127] | 240 [21240] |
| Max. Output, kW [HP] | Cont. | 41 [55] | 41 [55] | 41 [55] | 41 [55] | 41 [55] | 37,5 [50] | 28 [37,5] | 26 [35] |
| | Int.* | 65 [87] | 70 [94] | 70 [94] | 70 [94] | 55 [74] | 51 [68] | 42 [56] | 40 [54] |
| Max. Pressure Drop, bar [PSI] | Cont. | 250 [3600] | 250 [3600] | 250 [3600] | 250 [3600] | 250 [3600] | 230 [3340] | 185 [2680] | 160 [2320] |
| | Int.* | 350 [5080] | 350 [5080] | 350 [5080] | 350 [5080] | 320 [4640] | 280 [4060] | 225 [3260] | 210 [3045] |
| | Peak** | 400 [5800] | 400 [5800] | 400 [5800] | 400 [5800] | 400 [5800] | 320 [4640] | 270 [3915] | 260 [3770] |
| Max. Oil Flow, lpm [GPM] | Cont. | 125 [33] | 125 [33] | 125 [33] | 125 [33] | 125 [33] | 125 [33] | 125 [33] | 125 [33] |
| | Int.* | 150 [40] | 150 [40] | 150 [40] | 150 [40] | 150 [40] | 150 [40] | 150 [40] | 150 [40] |
| Max. Inlet Pressure, bar [PSI] | Cont. | 270 [3920] | 270 [3920] | 270 [3920] | 270 [3920] | 270 [3920] | 270 [3920] | 270 [3920] | 270 [3920] |
| | Int.* | 370 [5370] | 370 [5370] | 370 [5370] | 370 [5370] | 370 [5370] | 370 [5370] | 370 [5370] | 370 [5370] |
| | Peak** | 420 [6100] | 420 [6100] | 420 [6100] | 420 [6100] | 420 [6100] | 420 [6100] | 420 [6100] | 420 [6100] |
| Max. Return Pressure w/o Drain Line or Max. Pressure in Drain Line, bar [PSI] | Cont. 0-100 RPM | 75 [1100] | 75 [1100] | 75 [1100] | 75 [1100] | 75 [1100] | 75 [1100] | 75 [1100] | 75 [1100] |
| | Cont. 100-300 RPM | 40 [580] | 40 [580] | 40 [580] | 40 [580] | 40 [580] | 40 [580] | 40 [580] | 40 [580] |
| | Cont. >300 RPM | 20 [290] | 20 [290] | 20 [290] | 20 [290] | 20 [290] | - | - | - |
| | Int.* 0-max. RPM | 75 [1100] | 75 [1100] | 75 [1100] | 75 [1100] | 75 [1100] | 75 [1100] | 75 [1100] | 75 [1100] |
| Max. Return Pressure with Drain Line, bar [PSI] | Cont. | 140 [2000] | 140 [2000] | 140 [2000] | 140 [2000] | 140 [2000] | 140 [2000] | 140 [2000] | 140 [2000] |
| | Int.* | 175 [2500] | 175 [2500] | 175 [2500] | 175 [2500] | 175 [2500] | 175 [2500] | 175 [2500] | 175 [2500] |
| | Peak** | 210 [3000] | 210 [3000] | 210 [3000] | 210 [3000] | 210 [3000] | 210 [3000] | 210 [3000] | 210 [3000] |
| Max. Starting Pressure with Unloaded Shaft, bar [PSI] | | 6 [90] | 6 [90] | 6 [90] | 6 [90] | 6 [90] | 6 [90] | 6 [90] | 6 [90] |
| Min. Starting Torque, daNm [lb-in] | | 60 [5310] | 75 [6640] | 97 [8585] | 122 [10800] | 142 [12570] | 143 [12655] | 145 [12830] | 148 [13100] |
| Min. Speed***, RPM | | 5 | 5 | 5 | 5 | 5 | 5 | 5 | 5 |
| Weight, kg [lb] | | 26,9 [59.3] | 27,3 [60.2] | 28,1 [62] | 29 [64] | 29,7 [65.5] | 30,2 [66.6] | 29,7 [65.5] | 31 [68.4] |

* Intermittent operation: the permissible values may occur for max. 10% of every minute.
** Peak load: the permissible values may occur for max. 1% of every minute.
*** For speeds lower than given, consult factory or your regional manager.

1. Intermittent speed and intermittent pressure must not occur simultaneously.
2. Recommended filtration is per ISO cleanliness code 20/16. A nominal filtration of 25 micron or better.
3. Recommend using a premium quality, anti-wear type mineral based hydraulic oil HLP(DIN51524) or HM (ISO 6743/4). If using synthetic fluids consult the factory for alternative seal materials.
4. Recommended minimum oil viscosity 13 mm²/s [70 SUS] at 50°C [122°F].
5. Recommended maximum system operating temperature is 82°C [180°F].
6. To assure optimum motor life fill with fluid prior to loading and run at moderate load and speed for 10-15 minutes.

# FUNCTION DIAGRAMS

## TMF 200

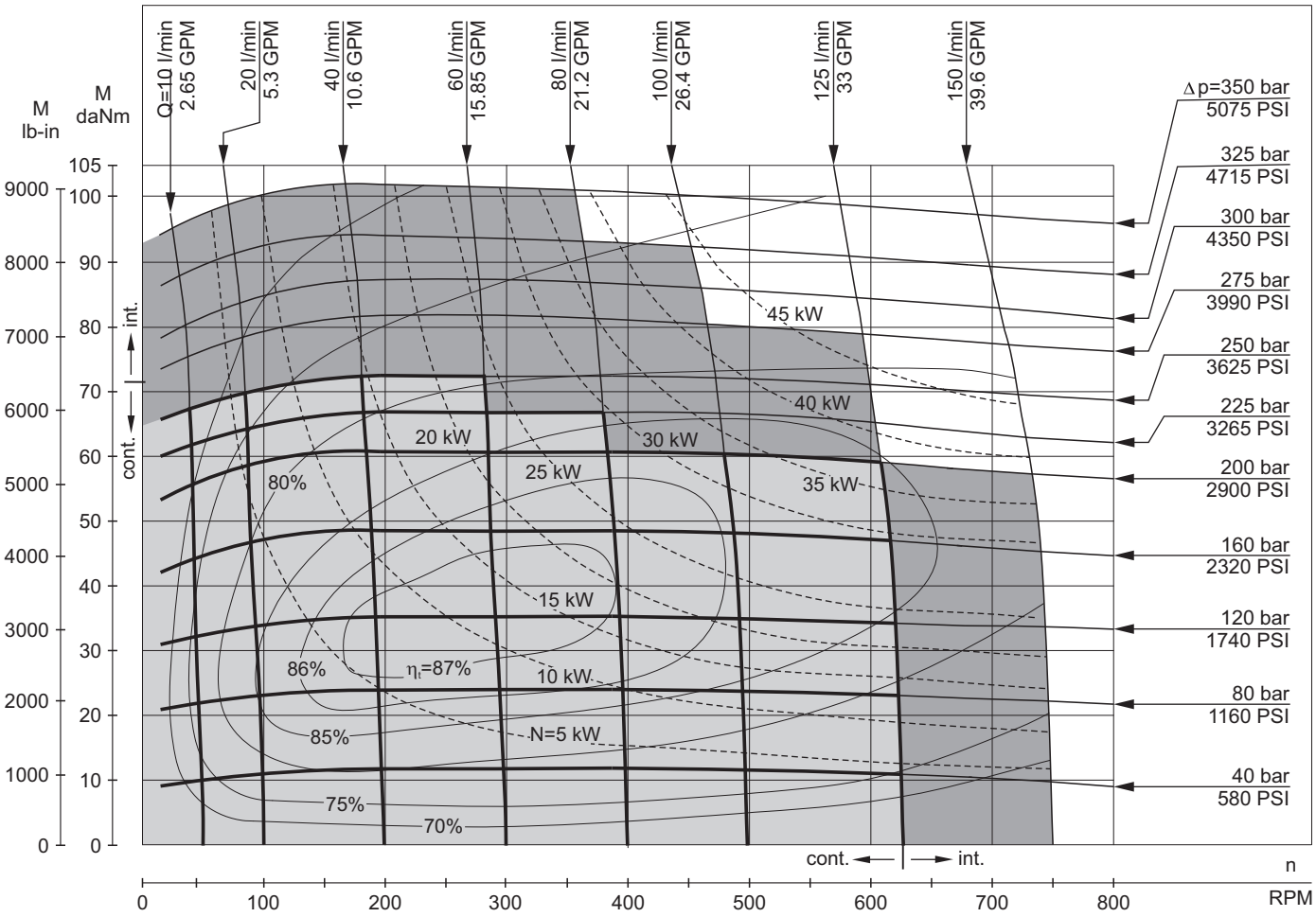


## TMF 250

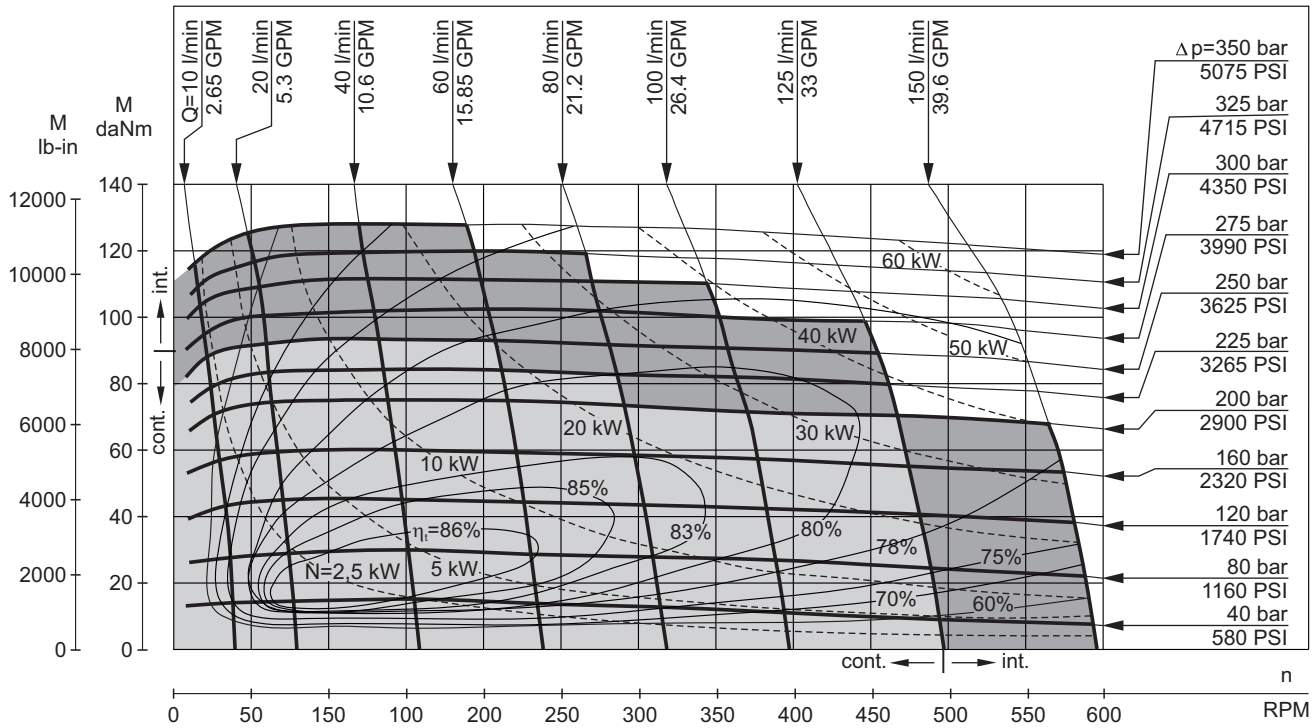


The function diagrams data is for average performance of randomly selected motors at back pressure 5÷10 bar [72.5 PSI÷145 PSI] and oil with viscosity of 32 mm²/s [150 SUS] at 50°C [122°F].

# FUNCTION DIAGRAMS

## TMF 315

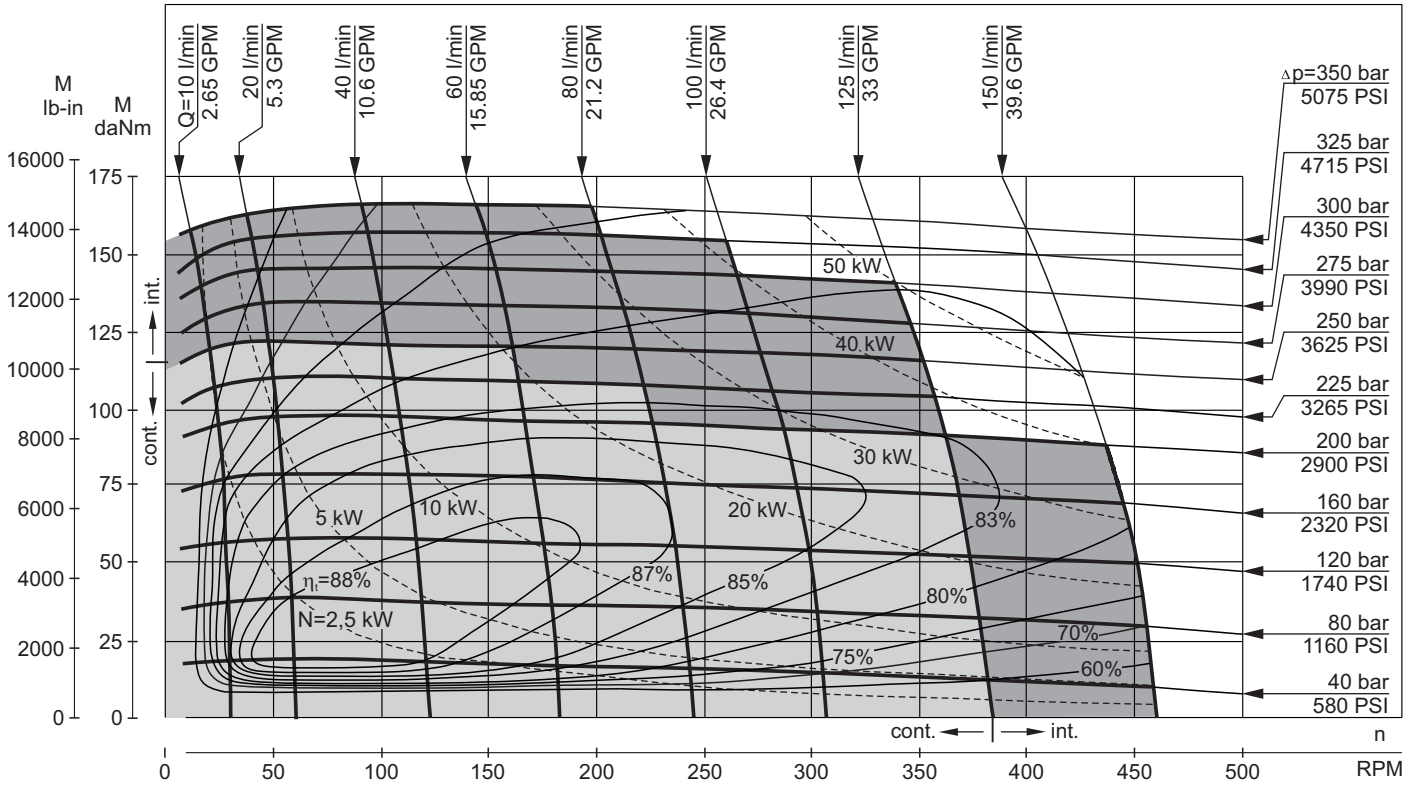


## TMF 400

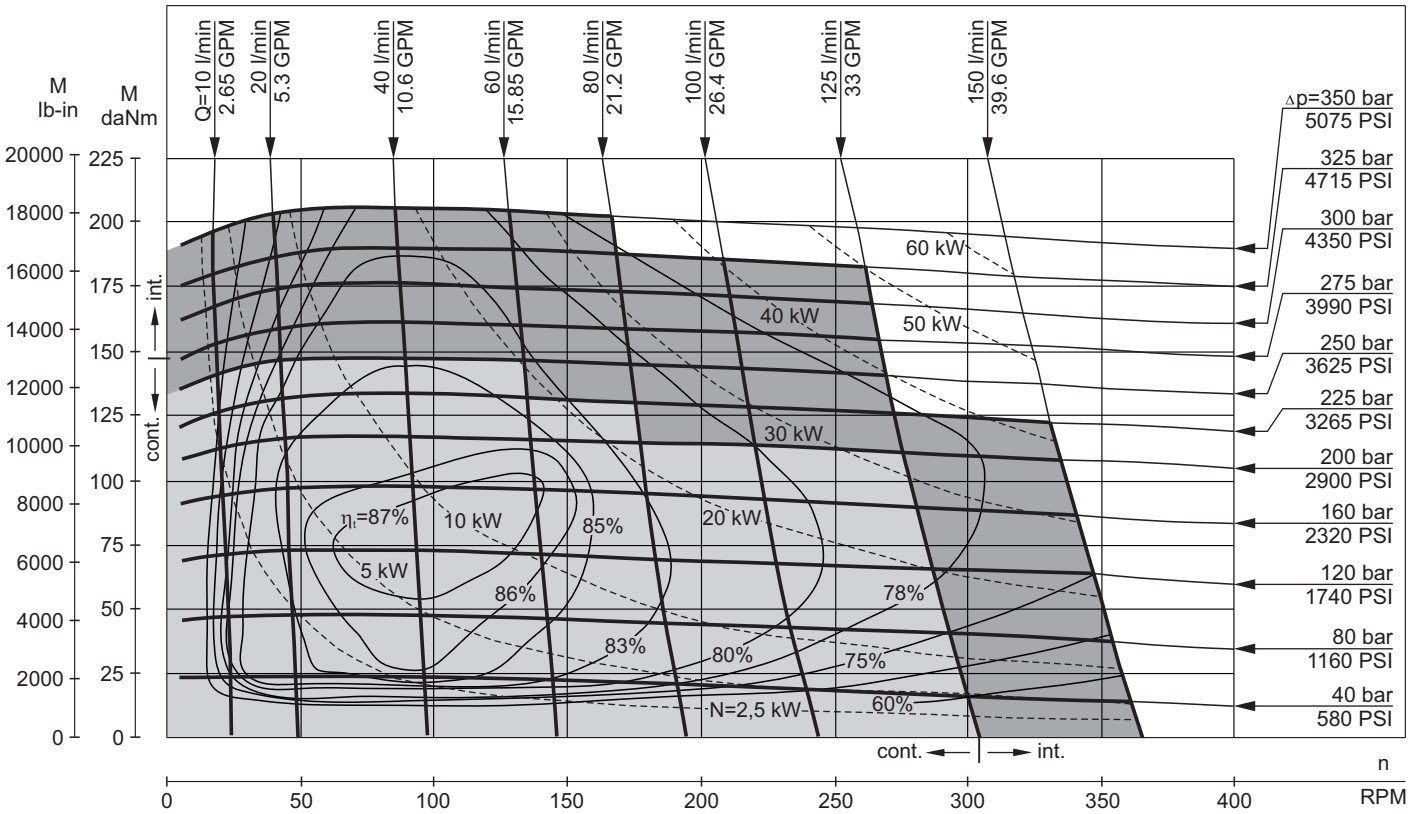


The function diagrams data is for average performance of randomly selected motors at back pressure 5÷10 bar [72.5 PSI÷145 PSI] and oil with viscosity of 32 mm²/s [150 SUS] at 50°C [122°F].

# FUNCTION DIAGRAMS

## TMF 470

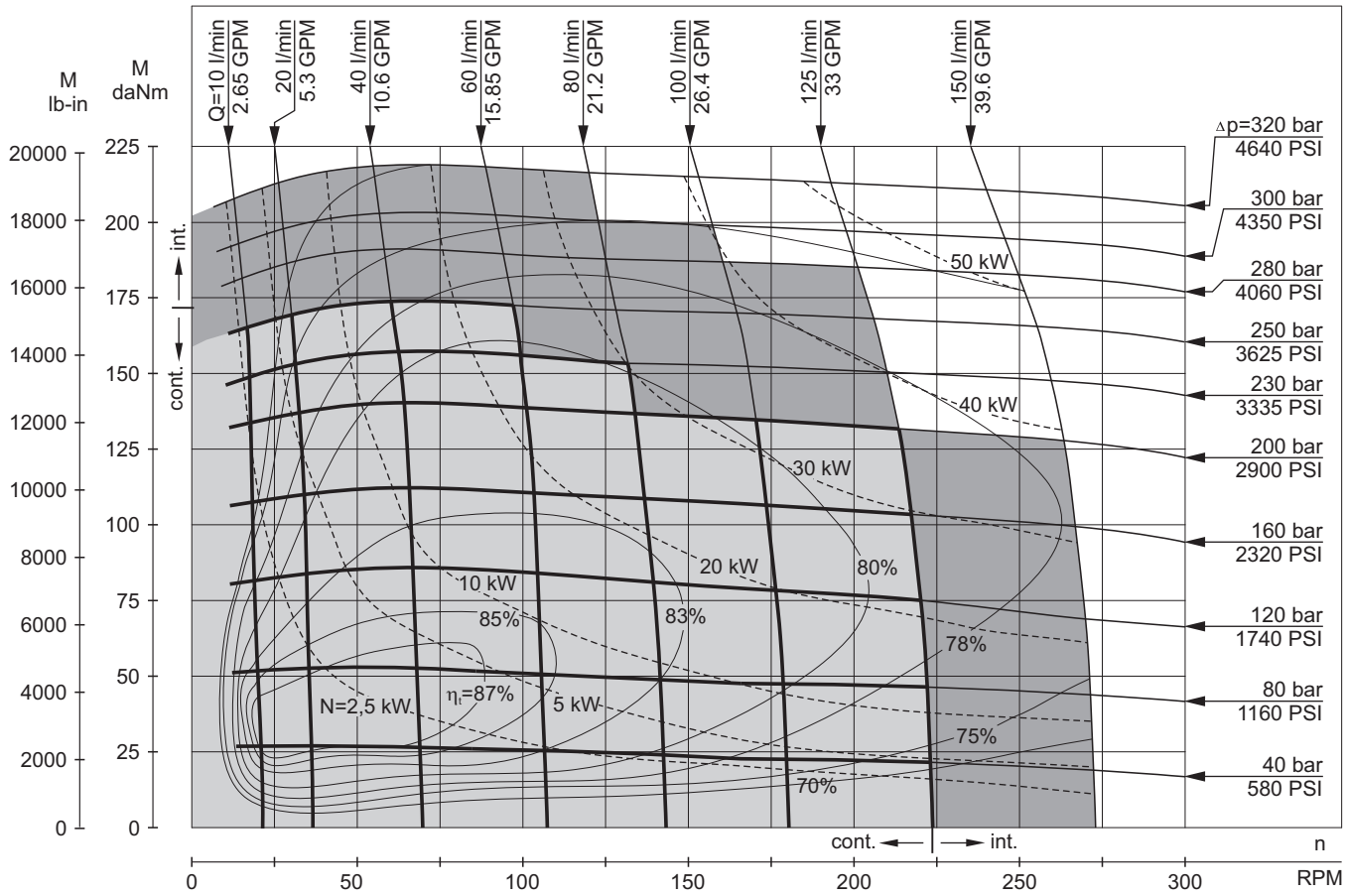


## TMF 500

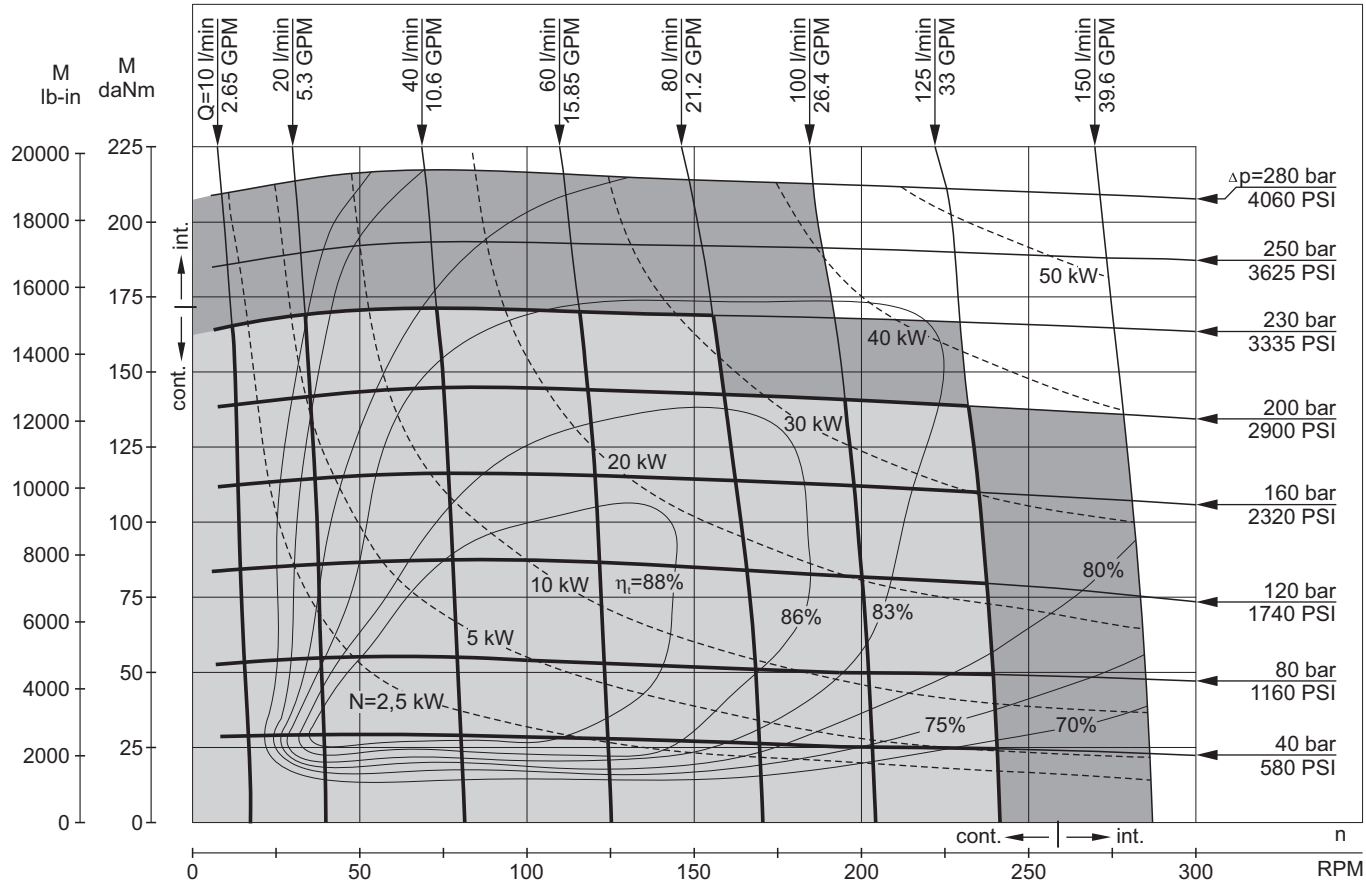


The function diagrams data is for average performance of randomly selected motors at back pressure 5÷10 bar [72.5 PSI÷145 PSI] and oil with viscosity of 32 mm²/s [150 SUS] at 50°C [122°F].

# FUNCTION DIAGRAMS

## TMF 630

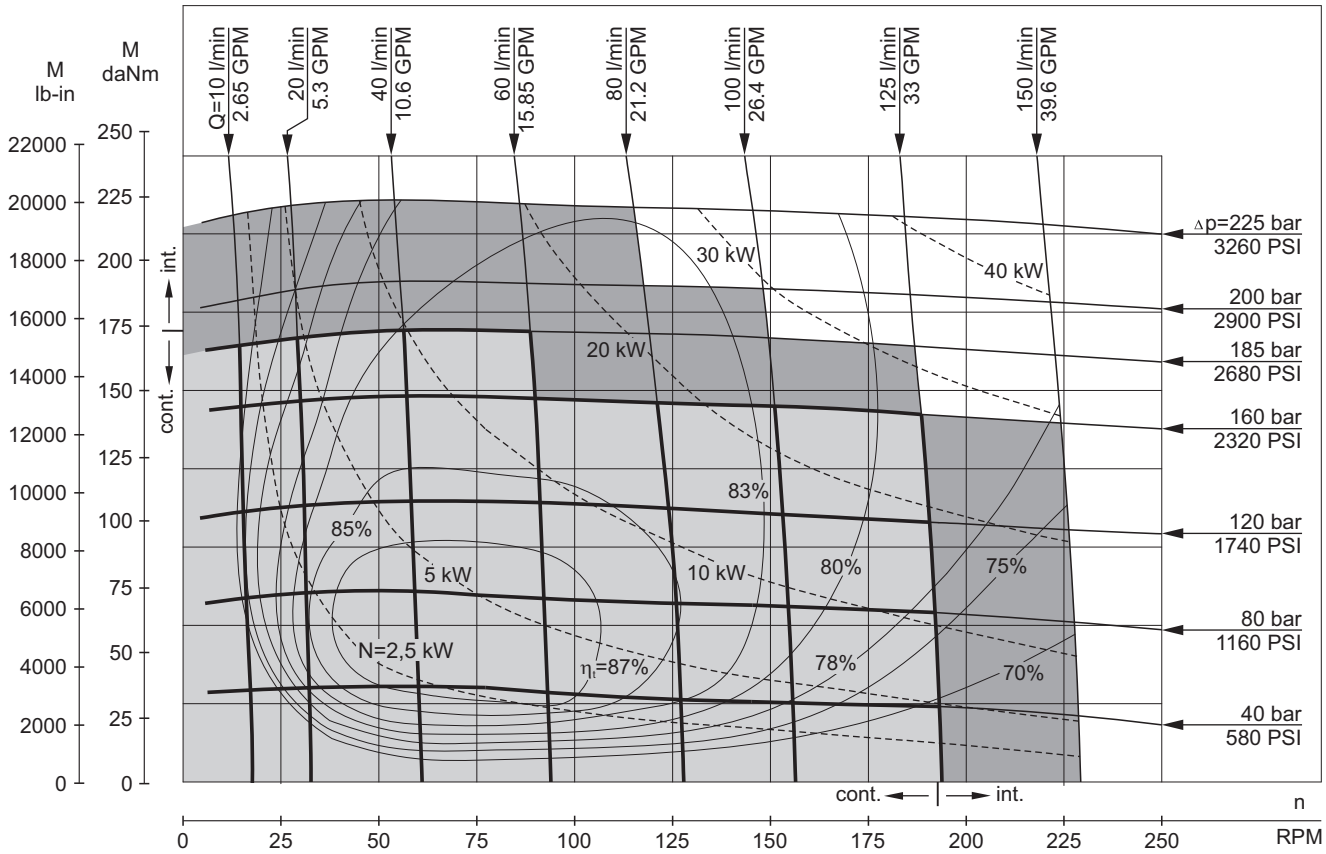


## TMF 725

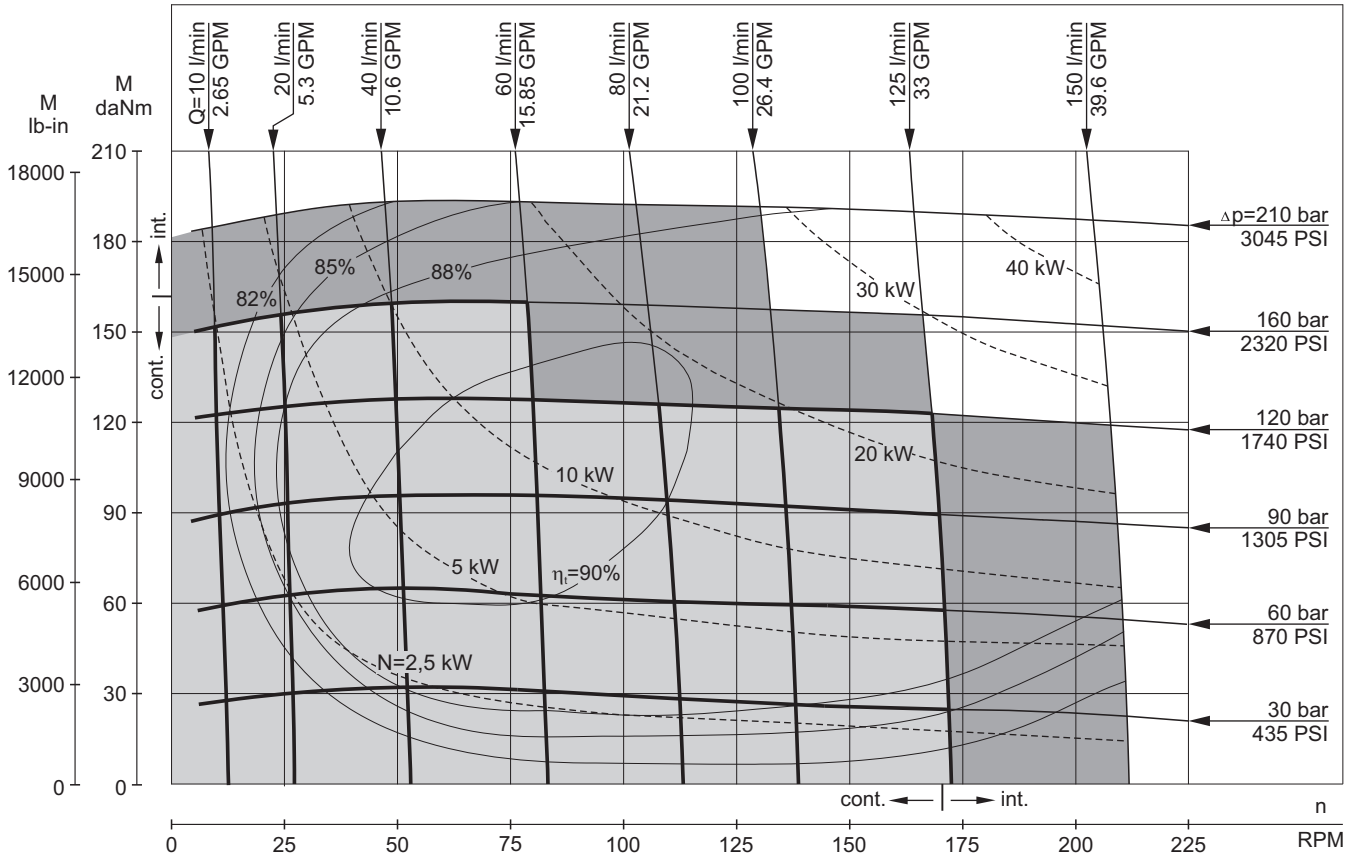


The function diagrams data is for average performance of randomly selected motors at back pressure 5÷10 bar [72.5 PSI÷145 PSI] and oil with viscosity of 32 mm²/s [150 SUS] at 50°C [122°F].

## DIMENSIONS AND MOUNTING DATA - TMF

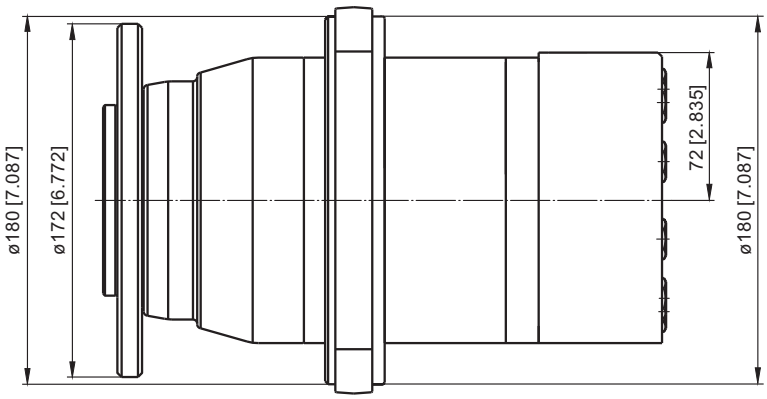


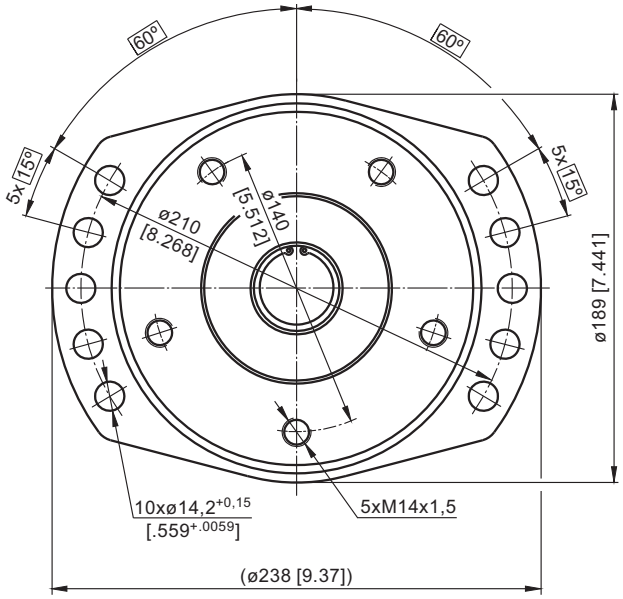


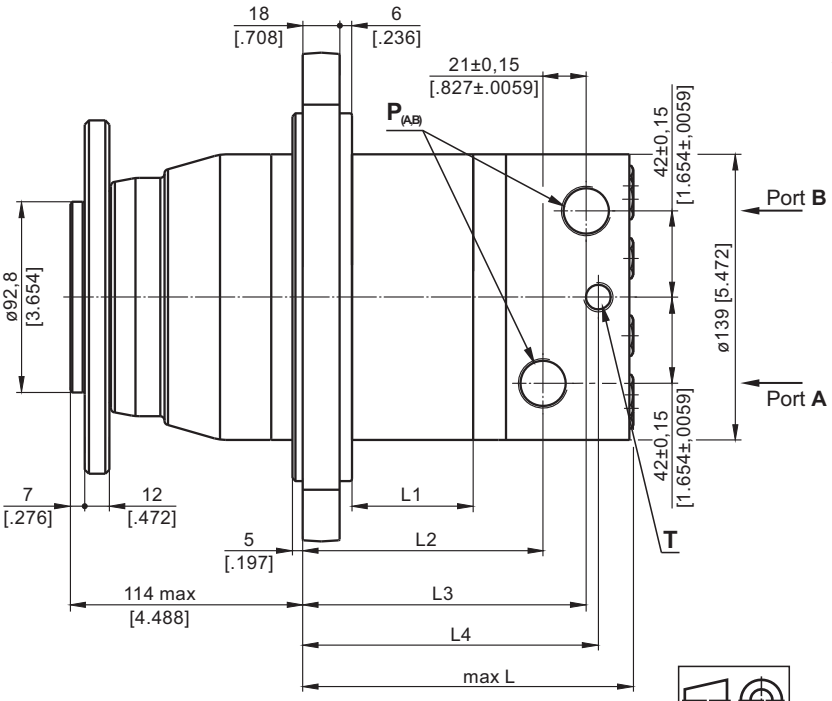


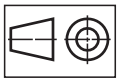

mm [in]

### TMF - version 3

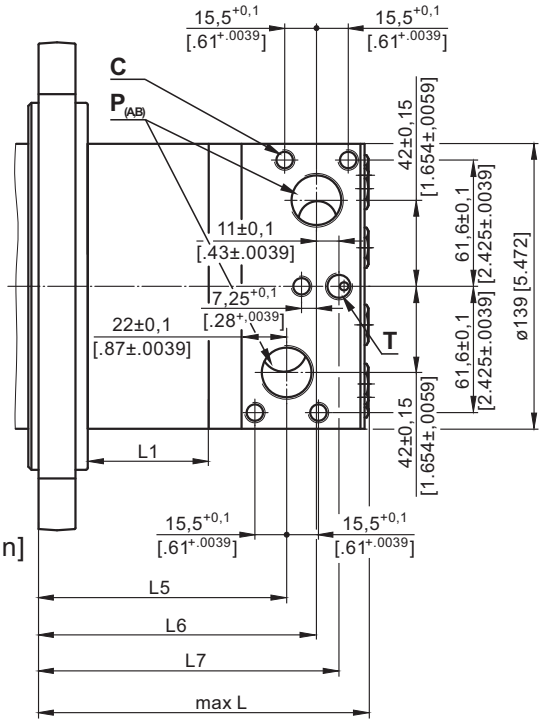


**Warning:** Drain line should always be used.

| | Versions | | |
|---|---|---|---|
| | 2 | 3 | 4 |
| P(A,B) | 2xG3/4<br>17 mm [.669 in] depth | 2xG3/4<br>17 mm [.669 in] depth | 2x1 1/16-12 UN<br>17 mm [.669 in] depth<br>O-ring |
| T | G1/4<br>12 mm [.472 in] depth | G1/4<br>12 mm [.472 in] depth | 9/16 -18 UN<br>12 mm [.472 in] depth<br>O-ring |
| C | - | 5xM10<br>17 mm [.669 in] depth | - |

**Standard Rotation**
Viewed from Shaft End
Port **A** Pressurized - **CW**
Port **B** Pressurized - **CCW**

**Reverse Rotation**
Viewed from Shaft End
Port **A** Pressurized - **CCW**
Port **B** Pressurized - **CW**

| Type | $L_{max}$, mm [ in] | $L_1$, mm [in] | $L_2$,mm [in] | $L_3$, mm [in] | $L_4$, mm [in] | $L_5$, mm [in] | $L_6$, mm [in] | $L_7$, mm [in] |
|---|---|---|---|---|---|---|---|---|
| TMF 200 | 128,0 [5.04] | 25,0 [ .98] | 83,0 [3.27] | 104,0 [4.09] | 110,3 [4.34] | 87,0 [3.43] | 101,5 [3.99] | 112,5 [4.43] |
| TMF 250 | 134,0 [5.28] | 31,3 [1.23] | 89,3 [3.52] | 110,3 [4.34] | 116,6 [4.59] | 93,5 [3.68] | 108,0 [4.25] | 118,8 [4.68] |
| TMF 315 | 143,5 [5.65] | 40,5 [1.59] | 98,5 [3.88] | 119,5 [4.70] | 125,8 [4.95] | 102,5 [4.04] | 117,0 [4.61] | 128,0 [5.04] |
| TMF 400 | 154,0 [6.06] | 51,0 [2.01] | 109,0 [4.29] | 130,0 [5.12] | 136,3 [5.37] | 113,0 [4.45] | 127,5 [5.02] | 138,5 [5.45] |
| TMF 470 | 162,0 [6.38] | 59,0 [2.32] | 117,0 [4.61] | 138,0 [5.43] | 144,3 [5.68] | 121,0 [4.76] | 135,0 [5.33] | 146,5 [5.77] |
| TMF 500 | 168,0 [6.61] | 65,0 [2.56] | 123,0 [4.84] | 144,0 [5.67] | 150,3 [5.92] | 127,0 [5.00] | 141,5 [5.57] | 152,5 [6.00] |
| TMF 630 | 164,0 [6.46] | 61,0 [2.40] | 119,0 [4.69] | 140,0 [5.51] | 146,3 [5.76] | 123,0 [4.84] | 137,5 [5.41] | 148,5 [5.85] |
| TMF 725 | 173,0 [6.81] | 70,0 [2.76] | 128,0 [5.04] | 149,0 [8.87] | 155,3 [6.11] | 132,0 [5.20] | 146,5 [5.77] | 157,5 [6.20] |

## DIMENSIONS AND MOUNTING DATA - TMFA

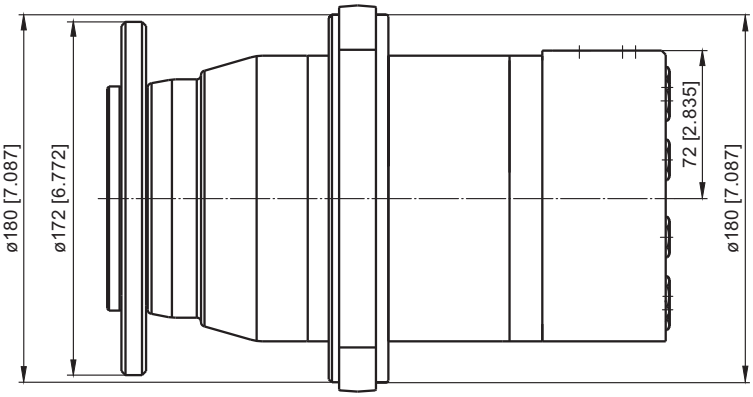


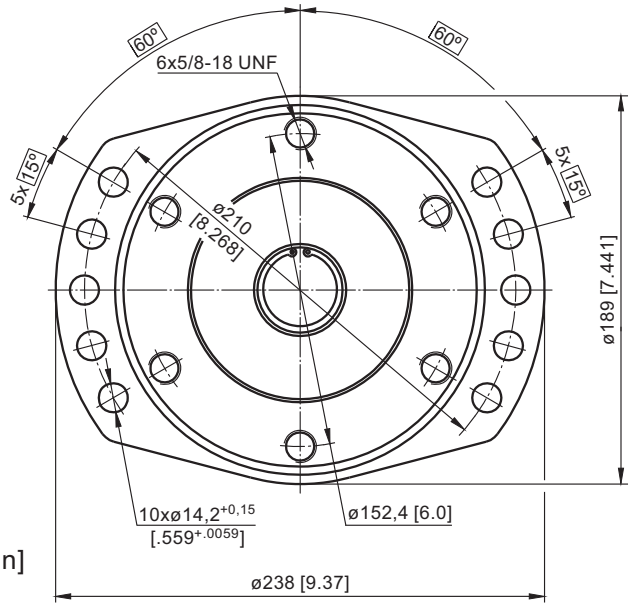


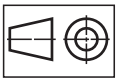

mm [in]

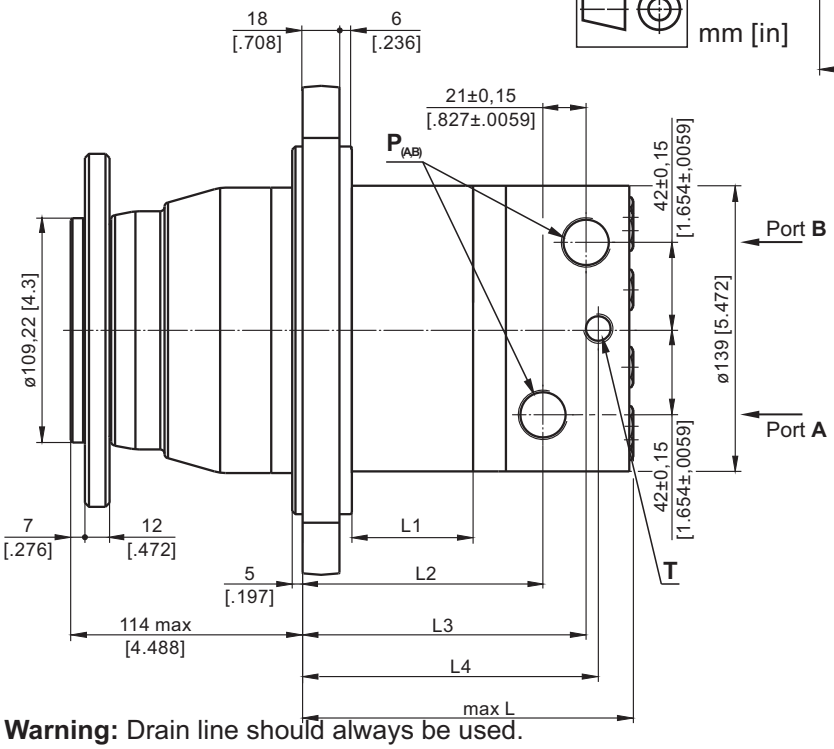


**Warning:** Drain line should always be used.

## TMF - version 3

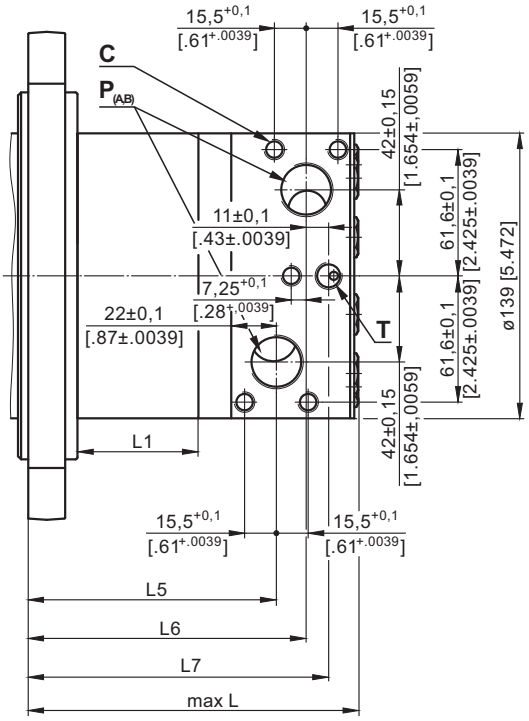


| | Versions | | |
|---|---|---|---|
| | 2 | 3 | 4 |
| P(A,B) | 2xG3/4<br>17 mm [.669 in] depth | 2xG3/4<br>17 mm [.669 in] depth | 2x1 1/16-12 UN<br>17 mm [.669 in] depth<br>O-ring |
| T | G1/4<br>12 mm [.472 in] depth | G1/4<br>12 mm [.472 in] depth | 9/16 -18 UN<br>12 mm [.472 in] depth<br>O-ring |
| C | - | 5xM10<br>17 mm [.669 in] depth | - |

**Standard Rotation**
Viewed from Shaft End
Port **A** Pressurized - **CW**
Port **B** Pressurized - **CCW**

**Reverse Rotation**
Viewed from Shaft End
Port **A** Pressurized - **CCW**
Port **B** Pressurized - **CW**

| Type | $L_{max}$, mm [ in] | $L_1$, mm [in] | $L_2$,mm [in] | $L_3$, mm [in] | $L_4$, mm [in] | $L_5$, mm [in] | $L_6$, mm [in] | $L_7$, mm [in] |
|---|---|---|---|---|---|---|---|---|
| TMF 200 | 128,0 [5.04] | 25,0 [ .98] | 83,0 [3.27] | 104,0 [4.09] | 110,3 [4.34] | 87,0 [3.43] | 101,5 [3.99] | 112,5 [4.43] |
| TMF 250 | 134,0 [5.28] | 31,3 [1.23] | 89,3 [3.52] | 110,3 [4.34] | 116,6 [4.59] | 93,5 [3.68] | 108,0 [4.25] | 118,8 [4.68] |
| TMF 315 | 143,5 [5.65] | 40,5 [1.59] | 98,5 [3.88] | 119,5 [4.70] | 125,8 [4.95] | 102,5 [4.04] | 117,0 [4.61] | 128,0 [5.04] |
| TMF 400 | 154,0 [6.06] | 51,0 [2.01] | 109,0 [4.29] | 130,0 [5.12] | 136,3 [5.37] | 113,0 [4.45] | 127,5 [5.02] | 138,5 [5.45] |
| TMF 470 | 162,0 [6.38] | 59,0 [2.32] | 117,0 [4.61] | 138,0 [5.43] | 144,3 [5.68] | 121,0 [4.76] | 135,0 [5.33] | 146,5 [5.77] |
| TMF 500 | 168,0 [6.61] | 65,0 [2.56] | 123,0 [4.84] | 144,0 [5.67] | 150,3 [5.92] | 127,0 [5.00] | 141,5 [5.57] | 152,5 [6.00] |
| TMF 630 | 164,0 [6.46] | 61,0 [2.40] | 119,0 [4.69] | 140,0 [5.51] | 146,3 [5.76] | 123,0 [4.84] | 137,5 [5.41] | 148,5 [5.85] |
| TMF 725 | 173,0 [6.81] | 70,0 [2.76] | 128,0 [5.04] | 149,0 [8.87] | 155,3 [6.11] | 132,0 [5.20] | 146,5 [5.77] | 157,5 [6.20] |

## PERMISSIBLE SHAFT LOADS

The load diagram is valid for an average bearings life of 2000 hours at 100 RPM

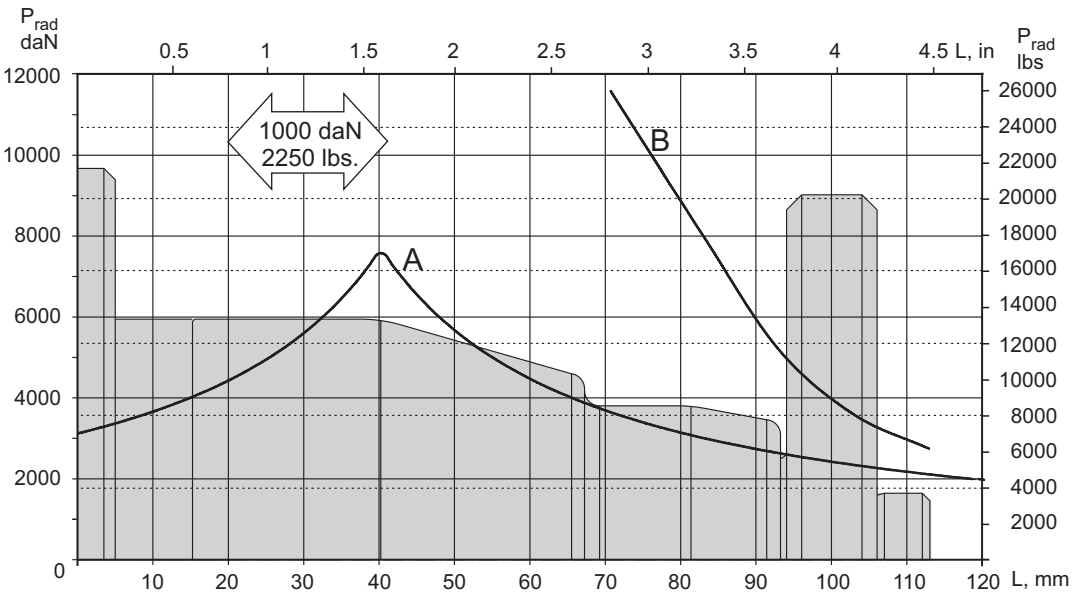


**A** - Permissible radial shaft load.
**B** - Max. radial shaft load. Any shaft load exceeding the values shown in the curve will involve a risk of breakage.

## ORDER CODE

| | 1 | 2 | 3 | 4 | 5 |
|---|---|---|---|---|---|
| **TMF** | | | | **HD** | |

**Pos.1 - Mounting Flange**

omit - Thread hole flange, 5xM14x1,5 on ø140 [5.512]

**A** - Thread hole flange, 6x5/8-18 UNF on ø152,4 [6.0]

**Pos.2 - Displacement code**

**200** - 201,4 $cm^3$/rev [12.29 $in^3$/rev]
**250** - 251,8 $cm^3$/rev [15.36 $in^3$/rev]
**315** - 326,3 $cm^3$/rev [19.90 $in^3$/rev]
**400** - 410,9 $cm^3$/rev [25.06 $in^3$/rev]
**470** - 475,0 $cm^3$/rev [28.97 $in^3$/rev]
**500** - 523,6 $cm^3$/rev [31.95 $in^3$/rev]
**630** - 631,2 $cm^3$/rev [38.52 $in^3$/rev]
**725** - 724,3 $cm^3$/rev [44.20 $in^3$/rev]

**Pos.3 - Ports**

**2** - side ports, 2xG3/4, G1/4, BSP thread, ISO 228
**3** - side ports, 2xG3/4, G1/4, 5xM10 BSP thread, ISO 228
**4** - side ports, 2x1 1/16-12 UN, O-ring, 9/16-18 UNF

**Pos.4 - Special Features**

**HD** - Reinforced motor **HD***

For Other **Special Features** see page 69

**Pos.5 - Design Series**

omit - Factory specified

**NOTES:** * Drain line should always be used.

The hydraulic motors are mangano-phosphatized as standard.

# HYDRAULIC MOTORS TMYF

## APPLICATION

»Marine equipment
»Forestry equipment
»Metal working machines
»Agriculture machines
»Road building machines
»Mining machinery
»Special vehicles etc.

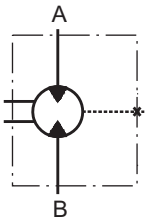


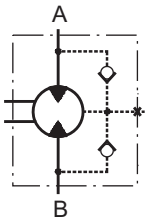


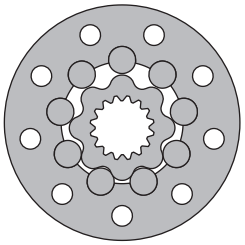

## CONTENTS


Specification data ..... 44
Function diagrams ..... 45÷47
Dimensions and mounting TMYF ..... 48÷50
Permissible shaft loads ..... 51
Order code ..... 51


## OPTIONS

»Model- Disc valve, roll-gerotor
»Wheel mounting flange
»Side ports
»Shaft- thread hole flange
»SAE and BSPP ports
»Other special features

## GENERAL

| | |
|---|---|
| **Max. Displacement,** $cm^3$/rev [$in^3$/rev] | 801,8 [48.91] |
| **Max. Speed,** [RPM] | 590 |
| **Max. Torque,** daNm [lb-in] | cont.: 259 [22920] int.: 340 [30090] |
| **Max. Output,** kW [HP] | 65 [87] |
| **Max. Pressure Drop,** bar [PSI] | cont.: 250 [3600] int.: 350 [5080] |
| **Max. Oil Flow,** lpm [GPM] | 240 [63.4] |
| **Min. Speed,** [RPM] | 5 |
| **Permissible Shaft Loads** daN [lbs] | $P_a$=1500 [3300] |
| **Pressure fluid** | Mineral based- HLP(DIN 51524) or HM(ISO 6743/4) |
| **Temperature range,** $^oC$ [$^oF$] | -40÷140 [-40÷284] |
| **Optimal Viscosity range,** $mm^2$/s [SUS] | 20÷75 [98÷347] |
| **Filtration** | ISO code 20/16 (Min. recommended fluid filtration of 25 micron) |

### Oil flow in drain line

| Pressure drop bar [PSI] | Viscosity $mm^2$/s [SUS] | Oil flow in drain line lpm [GPM] |
|---|---|---|
| 200 [2900] | 20 [98] | 2,5 [.660] |
| | 35 [164] | 1,5 [.400] |
| 275 [3990] | 20 [98] | 4 [1.057] |
| | 35 [164] | 2,5 [.660] |

### Pressure Losses

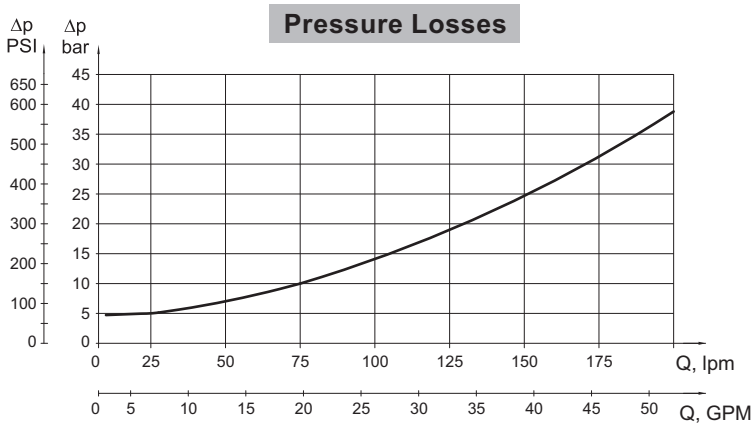

## SPECIFICATION DATA

| Type | | TMYF 315 | TMYF 400 | TMYF 500 | TMYF 630 | TMYF 800 |
|---|---|---|---|---|---|---|
| **Displacement, $cm^3$/rev [$in^3$/rev]** | | 314,5 [19.19] | 400,9 [24.5] | 499,6 [30.5] | 629,1 [38.38] | 801,8 [48.91] |
| **Max. Speed, [RPM]** | Cont. | 480 | 450 | 400 | 315 | 240 |
| | Int.* | 570 | 590 | 480 | 370 | 290 |
| **Max. Torque, daNm [lb-in]** | Cont. | 135 [11950] | 172 [15220] | 224 [19820] | 259 [22920] | 270 [23900] |
| | Int.* | 160 [14160] | 200 [17700] | 260 [23010] | 320 [28320] | 340 [30090] |
| | Peak** | 180 [15930] | 230 [20355] | 286 [25315] | 360 [31860] | 402 [35580] |
| **Starting Torque, daNm [lb-in]** | | 92 [8140] | 115 [10180] | 144 [12745] | 180 [15930] | 205 [18140] |
| **Max. Output, kW [HP]** | Cont. | 50 [67] | 55 [74] | 55 [74] | 50 [67] | 50 [67] |
| | Int.* | 55 [74] | 60 [80] | 65 [87] | 60 [80] | 60 [80] |
| **Max. Pressure Drop, bar [PSI]** | Cont. | 300 [4350] | 300 [4350] | 300 [4350] | 275 [3990] | 225 [3263] |
| | Int.* | 350 [5080] | 350 [5080] | 350 [5080] | 350 [5080] | 300 [4350] |
| | Peak** | 400 [5800] | 400 [5800] | 400 [5800] | 400 [5800] | 350 [5080] |
| **Max. Oil Flow, lpm [GPM]** | Cont. | 150 [39.6] | 180 [47.6] | 200 [52.8] | 200 [52.8] | 200 [52.8] |
| | Int.* | 180 [47.6] | 240 [63.4] | 240 [63.4] | 240 [63.4] | 240 [63.4] |
| **Max. Inlet Pressure, bar [PSI]** | Cont. | 300 [4350] | 300 [4350] | 300 [4350] | 300 [4350] | 300 [4350] |
| | Int.* | 380 [5510] | 380 [5510] | 380 [5510] | 380 [5510] | 380 [5510] |
| | Peak** | 420 [6090] | 420 [6090] | 420 [6090] | 420 [6090] | 420 [6090] |
| **Max. Starting Pressure with Unloaded Shaft, bar [PSI]** | | 5 [70] | 5 [70] | 5 [70] | 5 [70] | 5 [70] |
| **Max. Return Pressure with Drain Line, bar [PSI]** | Cont. | 140 [2030] | | | | |
| | Int.* | 175 [2540] | | | | |
| | Peak** | 210 [3046] | | | | |
| **Drain line:** | | **Should always be used!** | | | | |
| **Weight, kg [lb]** | TMYFT | 31,2 [68.8] | 31,8 [70.1] | 32,4 [71.4] | 34 [74.9] | 34,5 [76.1] |
| | TMYFV | 38,2 [84.4] | 38,8 [85.5] | 39,4 [86.9] | 41 [90.4] | 41,5 [91.5] |

* Intermittent operation: the permissible values may occur for max. 10% of every minute.
** Peak load: the permissible values may occur for max. 1% of every minute.
*** For speeds lower than given, consult factory or your regional manager.

1. Intermittent speed and intermittent pressure must not occur simultaneously.
2. Recommended filtration is per ISO cleanliness code 20/16. A nominal filtration of 25 micron or better.
3. Recommend using a premium quality, anti-wear type mineral based hydraulic oil HLP(DIN51524) or HM ( ISO 6743/4). If using synthetic fluids consult the factory for alternative seal materials.
4. Recommended minimum oil viscosity 13 mm²/s [70 SUS] at 50°C [122°F].
5. Recommended maximum system operating temperature is 82°C [180°F].
6. To assure optimum motor life fill with fluid prior to loading and run at moderate load and speed for 10-15 minutes.

# FUNCTION DIAGRAMS

## TMYF 315

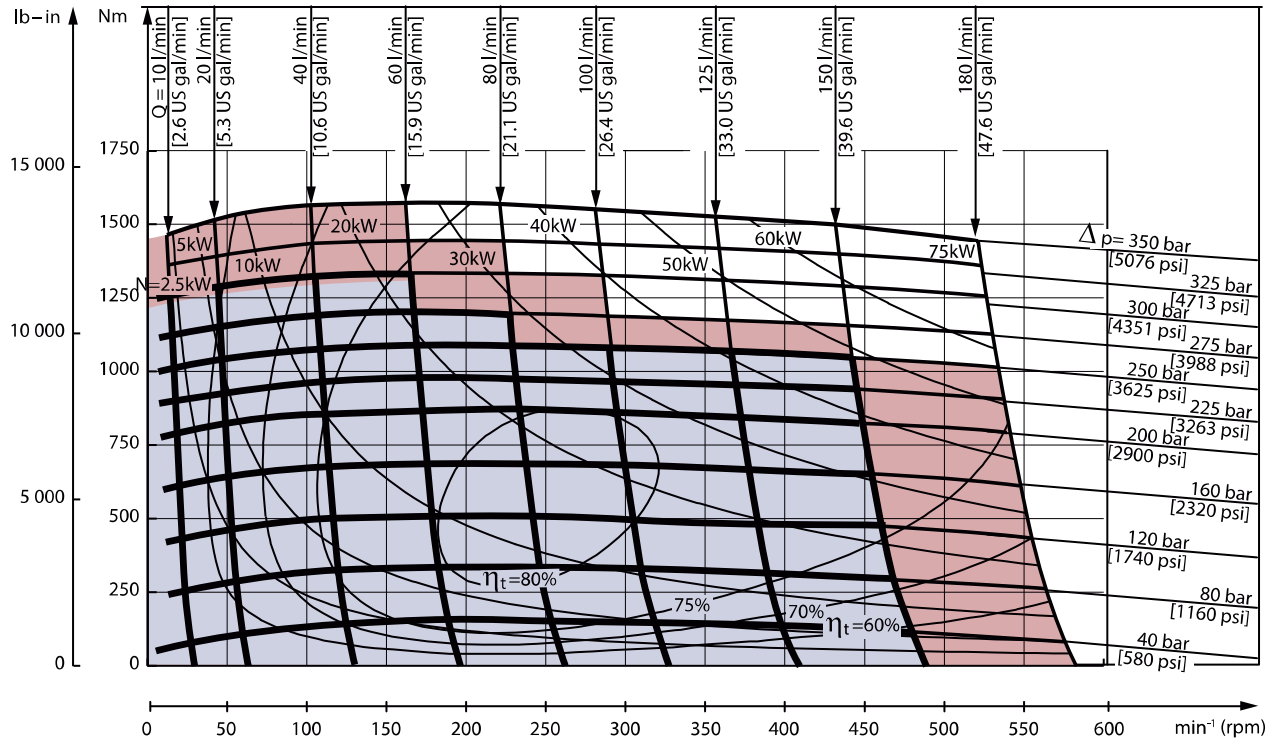


## TMYF 400

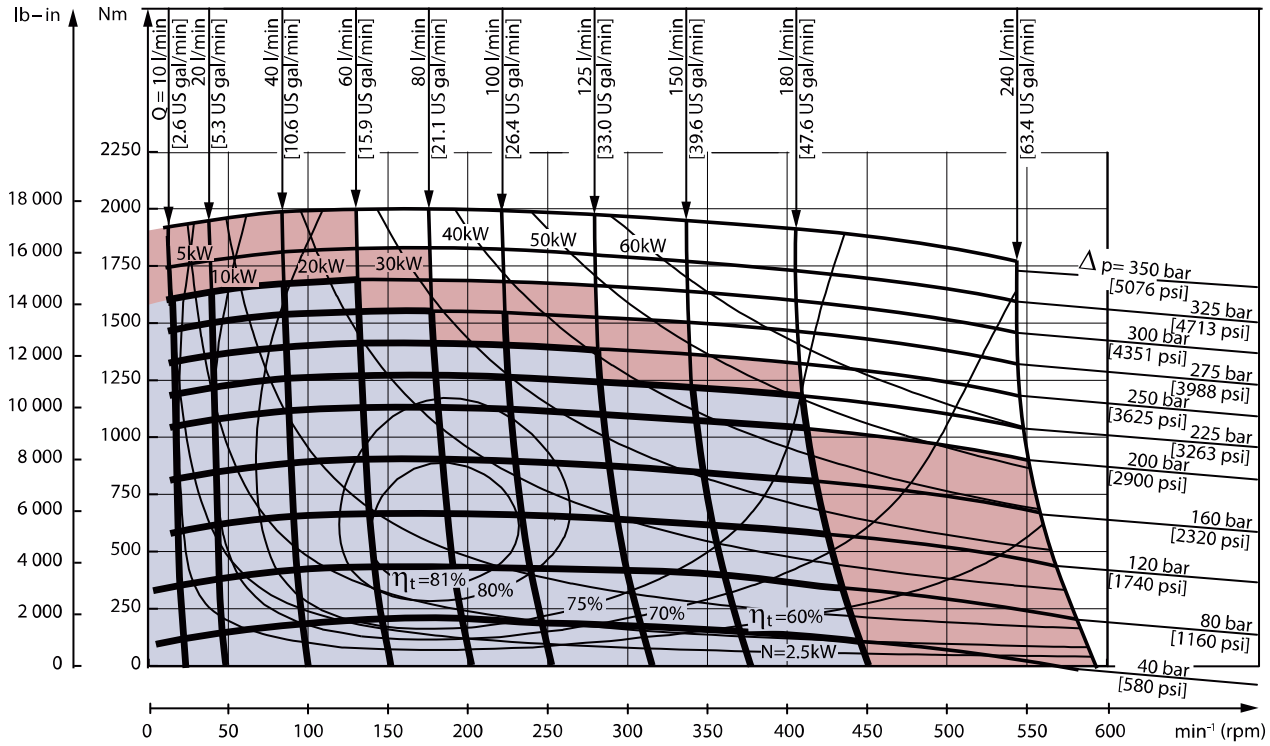


The function diagrams data is for average performance of randomly selected motors at back pressure 5÷10 bar [72.5 PSI÷145 PSI] and oil with viscosity of 32 mm²/s [150 SUS] at 50°C [122°F].

# FUNCTION DIAGRAMS

## TMYF 500

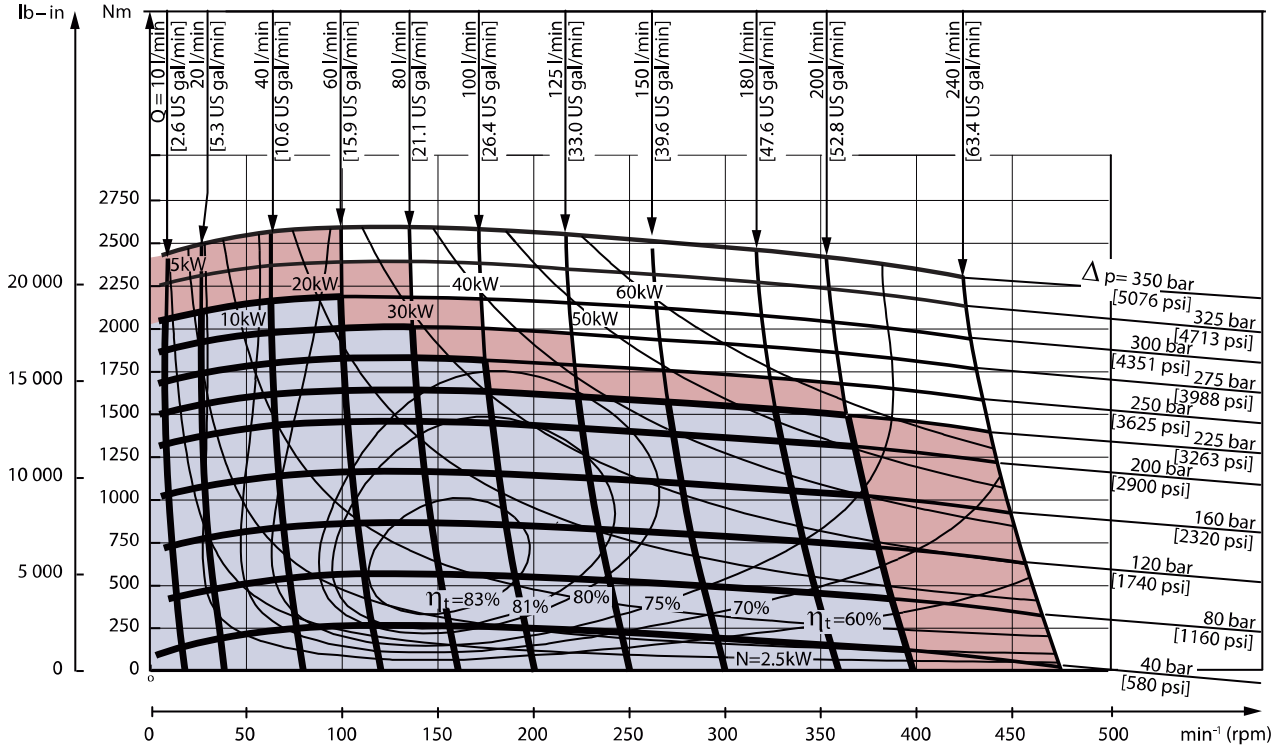


## TMYF 630

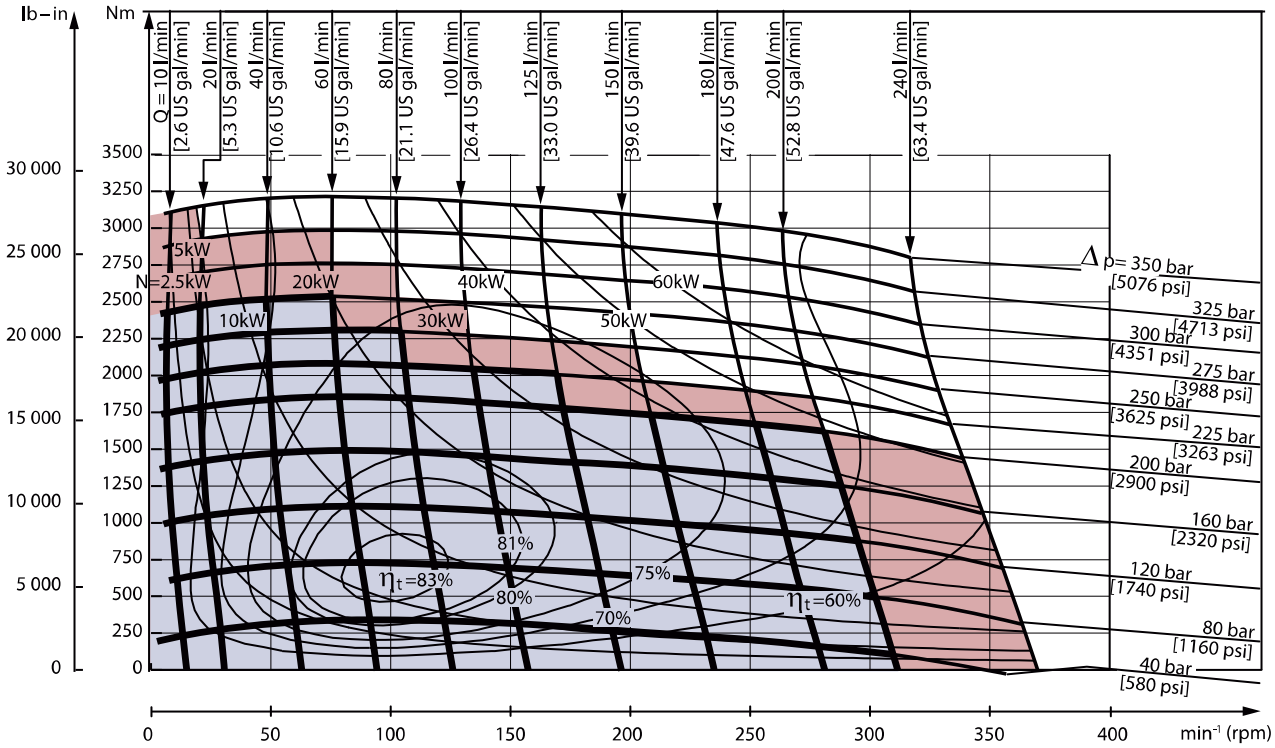


The function diagrams data is for average performance of randomly selected motors at back pressure 5÷10 bar [72.5 PSI÷145 PSI] and oil with viscosity of 32 mm²/s [150 SUS] at 50°C [122°F].

## FUNCTION DIAGRAMS

### TMYF 800

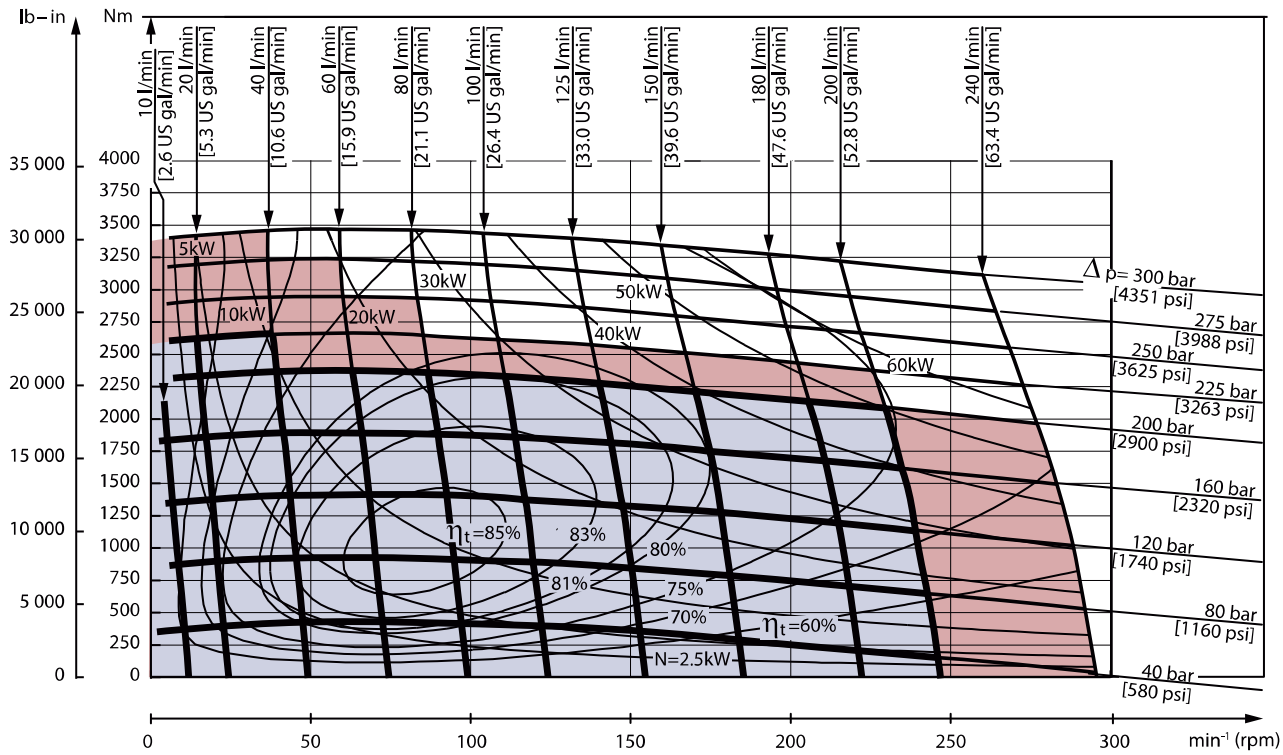


The function diagrams data is for average performance of randomly selected motors at back pressure 5÷10 bar [72.5 PSI÷145 PSI] and oil with viscosity of 32 mm²/s [150 SUS] at 50°C [122°F].

# OUTLINE DIMENSIONS REFERENCE

## TMYFT...5...

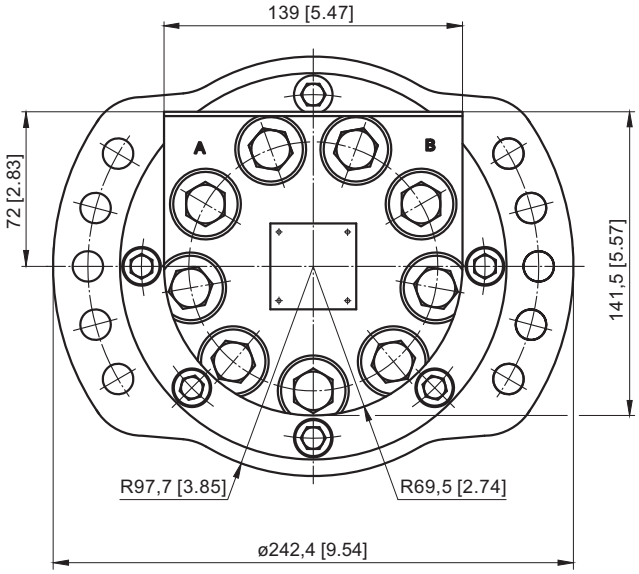


| | Versions | | |
|---|---|---|---|
| | 2 | 4 | 5 |
| C | - | - | 5xM10 |
| P(A,B) | 2xG¾ | 2x1 1/16-12 UN O-ring | 2xG¾ |
| T | G¼ | 9/16-18 UNF | G¼ |

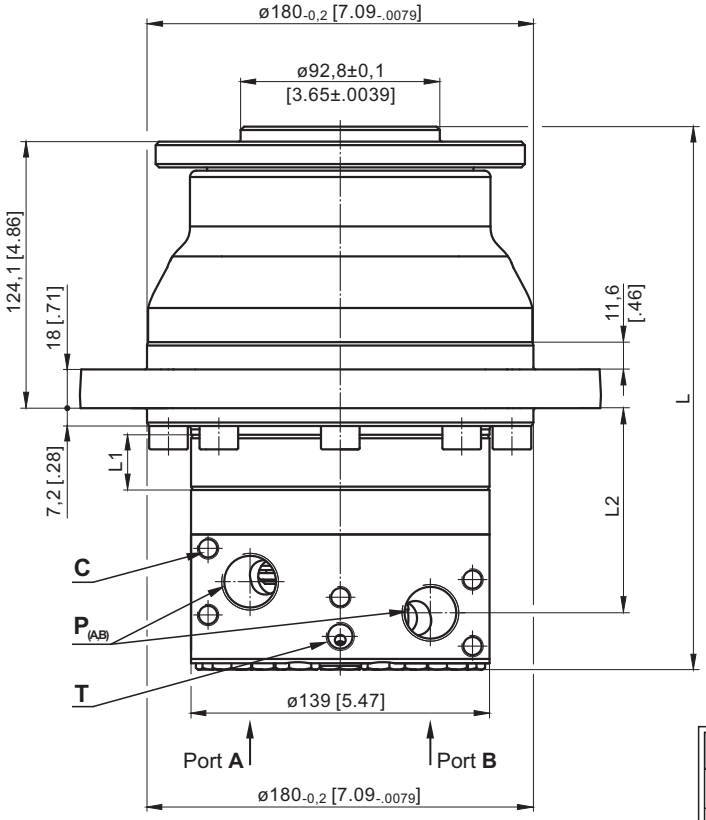


**Standard Rotation**
Viewed from Shaft End
Port **A** Pressurized - **CW**
Port **B** Pressurized - **CCW**

**Reverse Rotation**
Viewed from Shaft End
Port **A** Pressurized - **CCW**
Port **B** Pressurized - **CW**

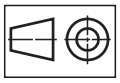

mm [in]

| Type | Lmax, mm [in] | L2, mm [in] | L1, mm [in] |
|---|---|---|---|
| TMYFT 315…5 | 253,5 [ 9.98] | 95,5 [3.76] | 25,5 [1.00] |
| TMYFT 400…5 | 260,5 [10.26] | 102,5 [4.04] | 32,5 [1.28] |
| TMYFT 500…5 | 268,5 [10.58] | 110,5 [4.35] | 40,5 [1.59] |
| TMYFT 630…5 | 279,0 [10.98] | 121,0 [4.76] | 51,0 [2.00] |
| TMYFT 800…5 | 293,0 [11.54] | 135,0 [5.31] | 65,0 [2.56] |

## TMYFT...2(4)...

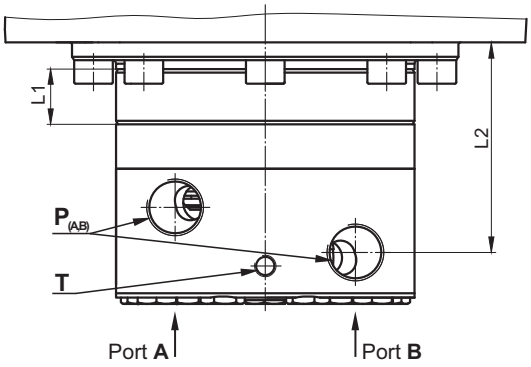


| Type | Lmax, mm [in] | L2, mm [in] | L1, mm [in] |
|---|---|---|---|
| TMYFT 315…2(4) | 253,5 [ 9.98] | 98,0 [3.86] | 25,5 [1.00] |
| TMYFT 400…2(4) | 260,5 [10.26] | 105,0 [4.13] | 32,5 [1.28] |
| TMYFT 500…2(4) | 268,5 [10.58] | 113,0 [4.45] | 40,5 [1.59] |
| TMYFT 630…2(4) | 279,0 [10.98] | 123,5 [4.86] | 51,0 [2.00] |
| TMYFT 800…2(4) | 293,0 [11.54] | 137,5 [5.41] | 65,0 [2.56] |

# OUTLINE DIMENSIONS REFERENCE

## TMYFV...5...

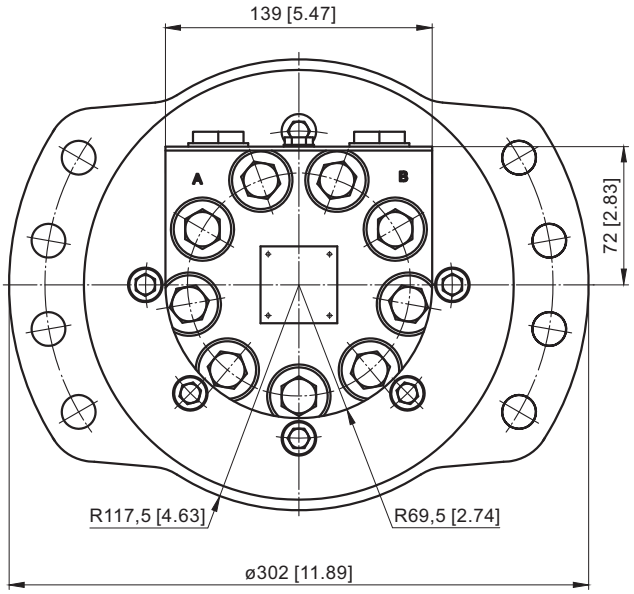


| | Versions | | |
|---|---|---|---|
| | 2 | 4 | 5 |
| C | - | - | 5xM10 |
| P(A,B) | 2xG¾ | 2x1 1/16-12 UN O-ring | 2xG¾ |
| T | G¼ | 9/16-18 UNF | G¼ |

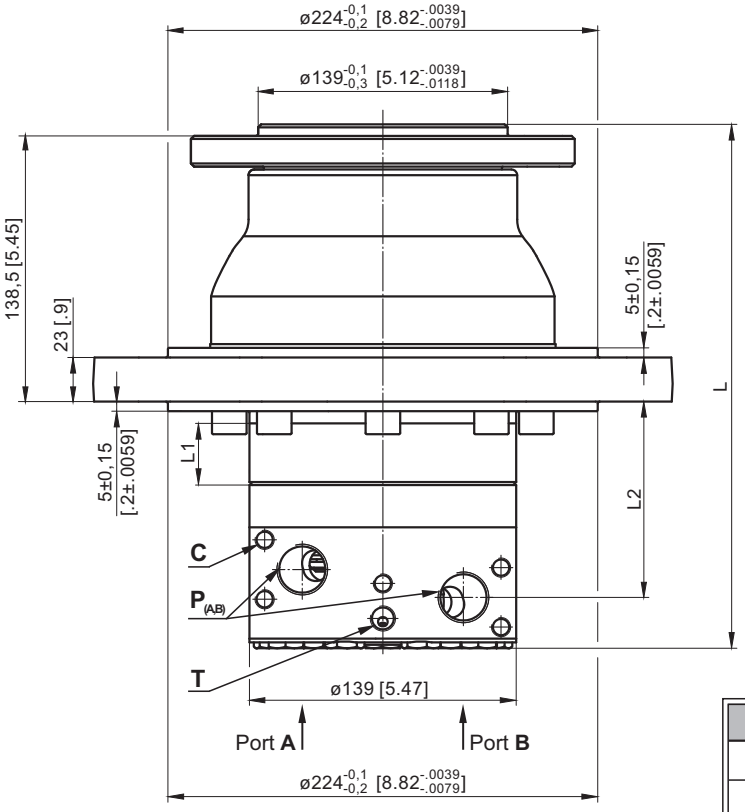


**Standard Rotation**
Viewed from Shaft End
Port **A** Pressurized - **CW**
Port **B** Pressurized - **CCW**

**Reverse Rotation**
Viewed from Shaft End
Port **A** Pressurized - **CCW**
Port **B** Pressurized - **CW**

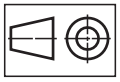
mm [in]

| Type | Lmax, mm [in] | L2, mm [in] | L1, mm [in] |
|---|---|---|---|
| TMYFV 315...5 | 266,0 [10.47] | 95 [3.74] | 25,5 [1.00] |
| TMYFV 400...5 | 273,0 [10.75] | 102 [4.02] | 32,5 [1.28] |
| TMYFV 500...5 | 281,0 [11.06] | 110 [4.33] | 40,5 [1.59] |
| TMYFV 630...5 | 291,5 [11.48] | 121 [4.76] | 51,0 [2.00] |
| TMYFV 800...5 | 305,5 [12.03] | 135 [5.31] | 65,0 [2.56] |

## TMYFV...2(4)...

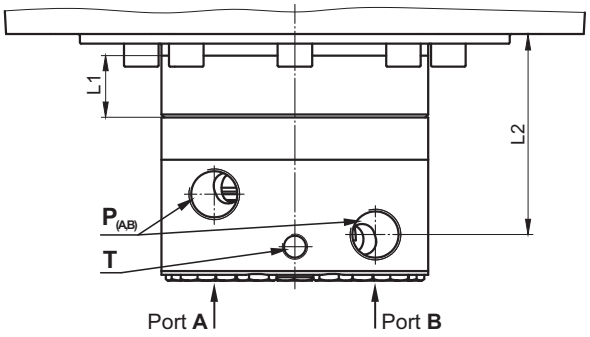


| Type | Lmax, mm [in] | L2, mm [in] | L1, mm [in] |
|---|---|---|---|
| TMYFV 315...2(4) | 266,0 [10.47] | 97,5 [3.84] | 25,5 [1.00] |
| TMYFV 400...2(4) | 273,0 [10.75] | 104,5 [4.11] | 32,5 [1.28] |
| TMYFV 500...2(4) | 281,0 [11.06] | 112,5 [4.43] | 40,5 [1.59] |
| TMYFV 630...2(4) | 291,5 [11.48] | 123,5 [4.86] | 51,0 [2.00] |
| TMYFV 800...2(4) | 305,5 [12.03] | 137,5 [5.41] | 65,0 [2.56] |

# MOUNTING

## TMYFT

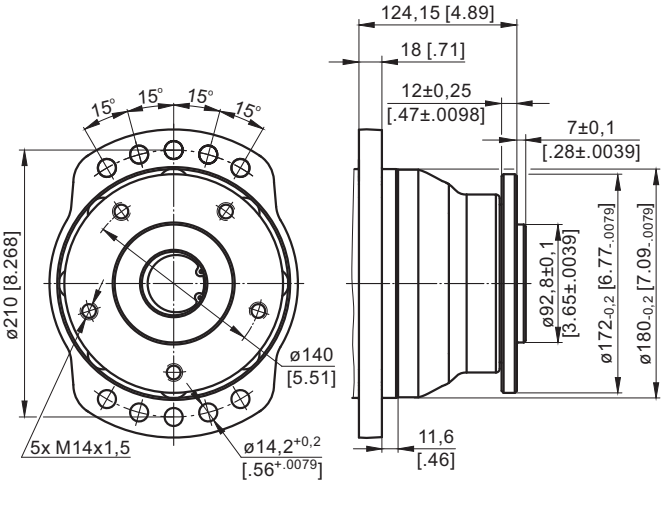


## TMYFV

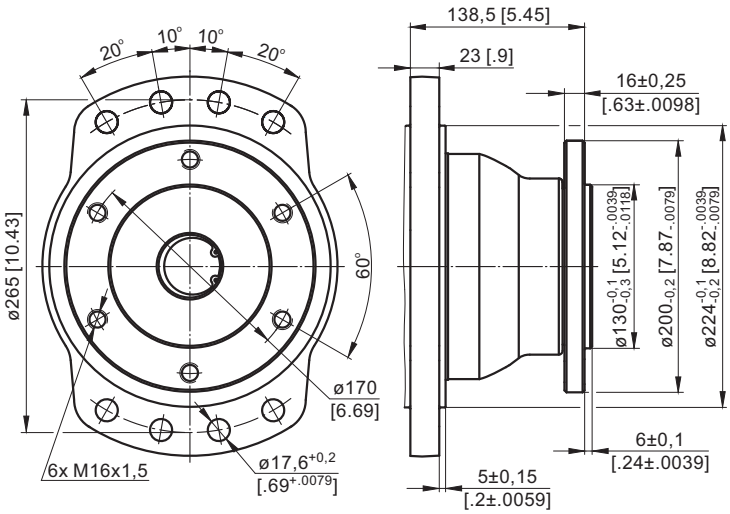


# PORTS

## TMYFT...5...

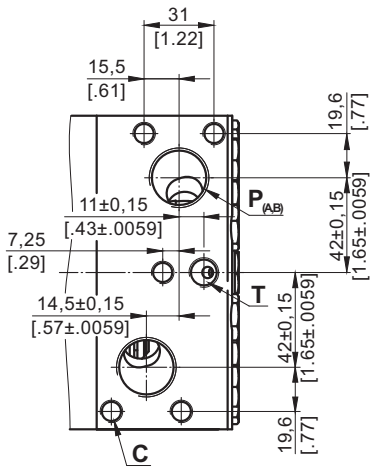


## TMYFT...2(4)...

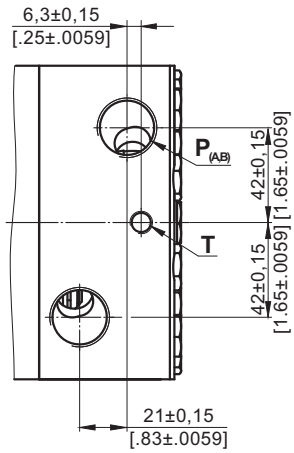


## TMYFV...5...

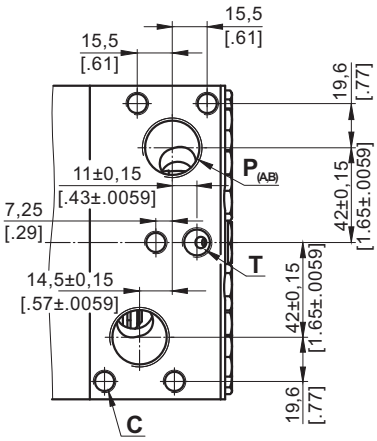


## TMYFV...2(4)...

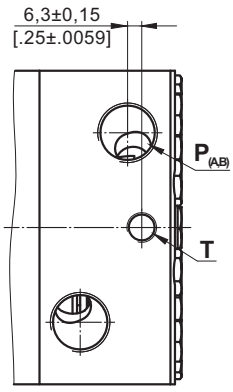


| | Versions | | |
|---|---|---|---|
| | 2 | 4 | 5 |
| C | - | - | 5xM10 |
| P(A,B) | 2xG¾ | 2x1 1/16-12 UN O-ring | 2xG¾ |
| T | G¼ | 9/16-18 UNF | G¼ |

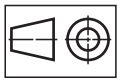
mm [in]

**Standard Rotation**
Viewed from Shaft End
Port **A** Pressurized - **CW**
Port **B** Pressurized - **CCW**

**Reverse Rotation**
Viewed from Shaft End
Port **A** Pressurized - **CCW**
Port **B** Pressurized - **CW**

# MAX. PERMISSIBLE SHAFT SEAL PRESSURE

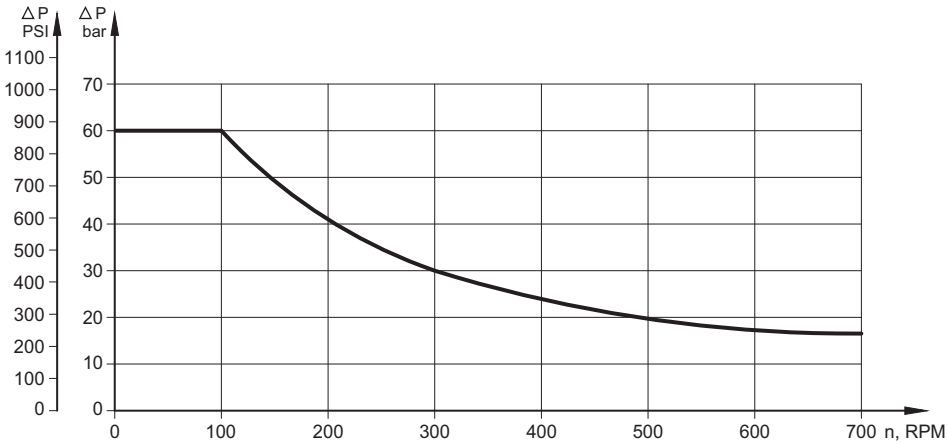

# PERMISSIBLE SHAFT LOADS

## TMYFT

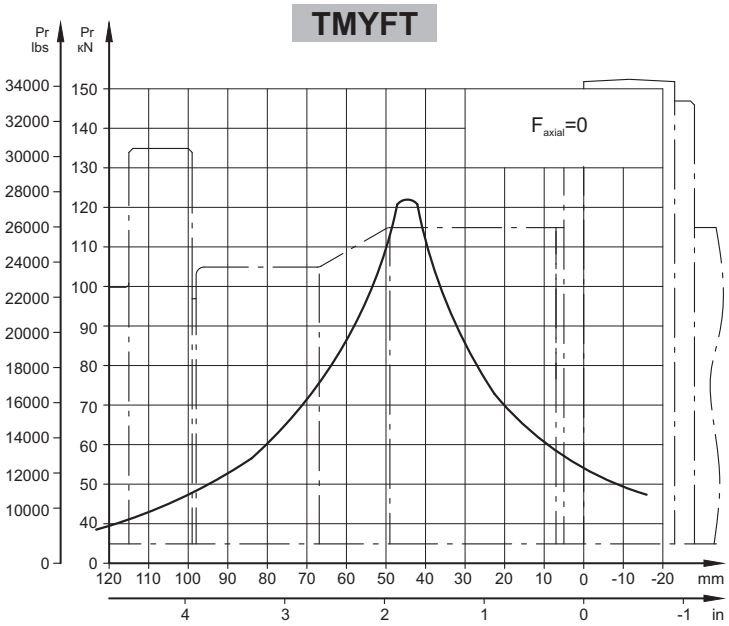


| n $min^{-1}$ | Correction factor - |
|---|---|
| 50 | 1,23 |
| 100 | 1,00 |
| 200 | 0,81 |
| 300 | 0,72 |
| 400 | 0,66 |
| 500 | 0,62 |

The curve of the radial load is based on the bearing life L10 by ISO 281 (2000 h at 100 $min^{-1}$ or 12 000 000 revolutions). For calculation of the radial load at speed different than 100 $min^{-1}$ must be used the coefficients shown in the table.

## TMYFV

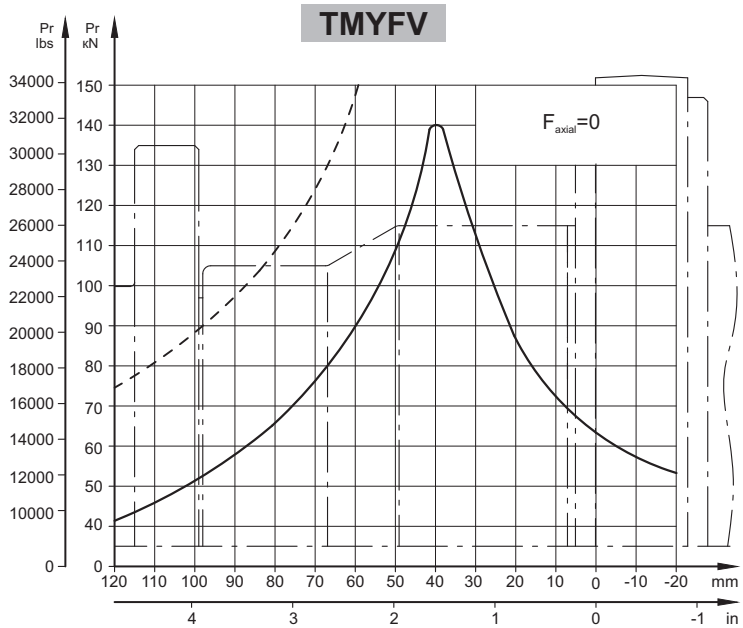


# ORDER CODE

| | 1 | 2 | | 3 | 4 | 5 | 6 |
|---|---|---|---|---|---|---|---|
| **T M Y F** | | | **-** | | | **HD** | |

**Pos.1 - Mounting Flange**

- **T** - 10-Bolt flange, spigot dia. ø180, BC ø210
- **V** - 8-Bolt flange, spigot dia. ø200, BC ø265

**Pos.2 - Displacement code**

- **315** - 314,5 $cm^3$/rev [19.19 $in^3$/rev]
- **400** - 400,9 $cm^3$/rev [24.50 $in^3$/rev]
- **500** - 499,6 $cm^3$/rev [30.50 $in^3$/rev]
- **630** - 629,1 $cm^3$/rev [38.38 $in^3$/rev]
- **800** - 801,8 $cm^3$/rev [48.91 $in^3$/rev]

**Pos.3 - Port Size/Type** [standard manifold to each]

- **2** - side ports, 2xG3/4, G1/4, BSP thread, ISO 228
- **4** - side ports, 2x$1^1/_{16}$-12 UN, O-ring, 9/16-18 UNF
- **5** - side ports, 2xG3/4, G1/4, 5xM10

**Pos.4 - Check Valves**

- omit - without check valves
- **1*** - with check valves

**Pos.5 - Special Features**

- **HD** - Reinforced motor **HD****

For Other **Special Features** see page 69

**Pos.6 - Design Series**

- omit - without check valves

**NOTES:** * Not for Port Size Version **5**!
** Drain line should always be used.

The hydraulic motors are mangano-phosphatized as standard.

# HYDRAULIC MOTORS MVM

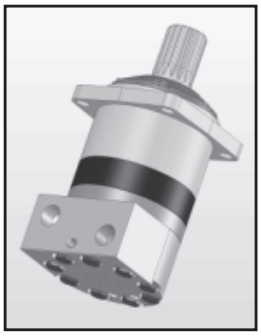

## APPLICATION

»Conveyors
»Metal working machines
»Agricultural machines
»Road building machines
»Mining machinery
»Food industries
»Special vehicles
»Plastic and rubber machinery etc.

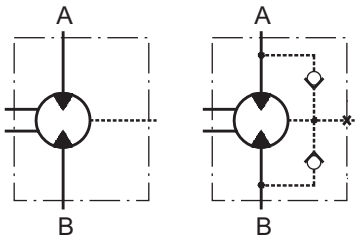


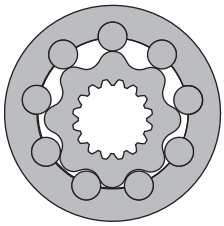

## OPTIONS

» Model - Disc valve, roll-gerotor
» Wheel mounting flange
» Short motor
» Side ports
» Shafts - straight, splined and tapered
» BSPP ports Metric, SAE and BSPP ports
» Other special features.

## CONTENTS


Specification data ..... 53
Function diagrams ..... 54÷56
Dimensions and mounting MVM and MVMC ..... 57
Dimensions and mounting MVMCA ..... 58
Mounting Flanges ..... 59
Port Types ..... 60
Permissible shaft seal Pressure ..... 60
Shaft extensions ..... 61
Order code ..... 62


## EXCELLENCE

» High torque and pressure drop
» High inlet pressure
» High starting torque
» Improved efficiency at high pressure drop and frequent reversing
» Smooth operation at low speed
» High radial and axial bearing capacity

## GENERAL

| | |
|---|---|
| **Max. Displacement,** $cm^3$/rev [$in^3$/rev] | 801,1 [48.91] |
| **Max. Speed,** [RPM] | 763 |
| **Max. Torque,** daNm [lb-in] | cont.: 259 [22920] int.: 340 [30090] |
| **Max. Output,** kW [HP] | 12 [150] |
| **Max. Pressure Drop,** bar [PSI] | cont.: 250 [3630] int.: 350 [5080] |
| **Max. Oil Flow,** lpm [GPM] | 240 [63.4] |
| **Min. Speed,** [RPM] | 5 |
| **Permissible Shaft Loads,** daN [lbs] | $P_a$=1500 [3370] |
| **Pressure fluid** | Mineral based- HLP(DIN 51524) or HM(ISO 6743/4) |
| **Temperature range,** $^oC$ [$^oF$] | -40÷140 [-40÷284] |
| **Optimal Viscosity range,** $mm^2$/s [SUS] | 20÷75 [98÷347] |
| **Filtration** | ISO code: 18/16/13 According to ISO 4406-1999 |

**Oil flow in drain line**

| Pressure drop bar [PSI] | Viscosity $mm^2$/s [SUS] | Oil flow in drain line lpm [GPM] |
|---|---|---|
| 140 [2030] | 20 [98] | 3 [.793] |
| | 35 [164] | 2 [.528] |
| 210 [3045] | 20 [98] | 6 [1.585] |
| | 35 [164] | 4 [1.057] |

**Pressure Losses**

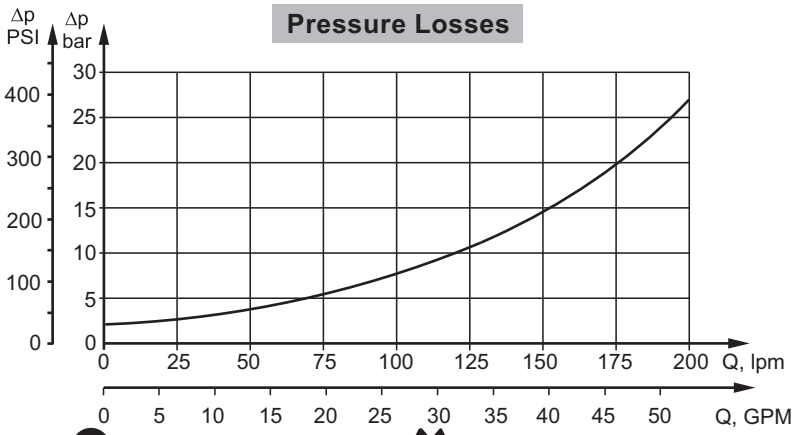

## SPECIFICATION DATA

| Type | | MVM 315 | MVM 400 | MVM 500 | MVM 630 | MVM 800 |
|---|---|---|---|---|---|---|
| **Displacement, $cm^3$/rev [$in^3$/rev]** | | 314,5 [19.19] | 400,9 [24.5] | 499,6 [30.5] | 629,1 [38.38] | 801,8 [48.91] |
| **Max. Speed, [RPM]** | Cont. | 636 | 500 | 400 | 315 | 250 |
| | Int.* | 763 | 600 | 480 | 380 | 300 |
| **Max. Torque, daNm [lb-in]** | Cont. | 115 [10180] | 144 [12745] | 180 [15930] | 227 [20090] | 259 [22920] |
| | Int.* | 160 [14160] | 200 [17700] | 260 [23010] | 310 [27440] | 340 [30090] |
| | Peak** | 180 [15930] | 230 [20355] | 286 [25315] | 360 [31860] | 402 [35580] |
| **Max. Output, kW [HP]** | Cont. | 67 [90] | 67 [90] | 67 [90] | 67 [90] | 67 [90] |
| | Int.* | 112 [150] | 112 [150] | 112 [150] | 112 [150] | 112 [150] |
| **Max. Pressure Drop, bar [PSI]** | Cont. | 250 [3630] | 250 [3630] | 250 [3630] | 250 [3630] | 250 [3630] |
| | Int.* | 350 [5080] | 350 [5080] | 350 [5080] | 350 [5080] | 350 [5080] |
| | Peak** | 400 [5800] | 400 [5800] | 400 [5800] | 400 [5800] | 400 [5800] |
| **Max. Oil Flow, lpm [GPM]** | Cont. | 200 [52.8] | 200 [52.8] | 200 [52.8] | 200 [52.8] | 200 [52.8] |
| | Int.* | 240 [63.4] | 240 [63.4] | 240 [63.4] | 240 [63.4] | 240 [63.4] |
| **Max. Inlet Pressure, bar [PSI]** | Cont. | 270 [3915] | 270 [3915] | 270 [3915] | 270 [3915] | 270 [3915] |
| | Int.* | 370 [5365] | 370 [5365] | 370 [5365] | 370 [5365] | 370 [5365] |
| | Peak** | 420 [6090] | 420 [6090] | 420 [6090] | 420 [6090] | 420 [6090] |
| **Max. Return Pressure with Drain Line, bar [PSI]** | Cont. | 140 [2030] | 140 [2030] | 140 [2030] | 140 [2030] | 140 [2030] |
| | Int.* | 175 [2540] | 175 [2540] | 175 [2540] | 175 [2540] | 175 [2540] |
| | Peak** | 210 [3045] | 210 [3045] | 210 [3045] | 210 [3045] | 210 [3045] |
| **Max. Starting Pressure with Unloaded Shaft, bar [PSI]** | | 5 [70] | 5 [70] | 5 [70] | 5 [70] | 5 [70] |
| **Min. Starting Torque, daNm [lb-in]** | | 92 [8140] | 115 [10180] | 144 [12745] | 180 [15930] | 205 [18145] |
| **Min. Speed***, [RPM]** | | 10 | 6 | 8 | 6 | 5 |
| **Weight, kg [lb]** | MVM | 41,3 [91] | 42,1 [93] | 43 [95] | 44,5 [98] | 46 [101.4] |
| | MVMC | 43,8 [96.6] | 44,9 [99] | 45,8 [101] | 48,3 [106.5] | 50,4 [111.1] |

* Intermittent operation: the permissible values may occur for max. 10% of every minute.
** Peak load: the permissible values may occur for max. 1% of every minute.
*** For speeds lower than given, consult factory or your regional manager.

1. Intermittent speed and intermittent pressure must not occur simultaneously.
2. Recommended filtration is per ISO cleanliness code 20/16. A nominal filtration of 25 micron or better.
3. Recommend using a premium quality, anti-wear type mineral based hydraulic oil HLP(DIN51524) or HM ( ISO 6743/4). If using synthetic fluids consult the factory for alternative seal materials.
4. Recommended minimum oil viscosity 13 $mm^2/s$ [70 SUS] at 50°C [122°F].
5. Recommended maximum system operating temperature is 82°C [180°F].
6. To assure optimum motor life fill with fluid prior to loading and run at moderate load and speed for 10-15 minutes.

# FUNCTION DIAGRAMS

## MVM 315

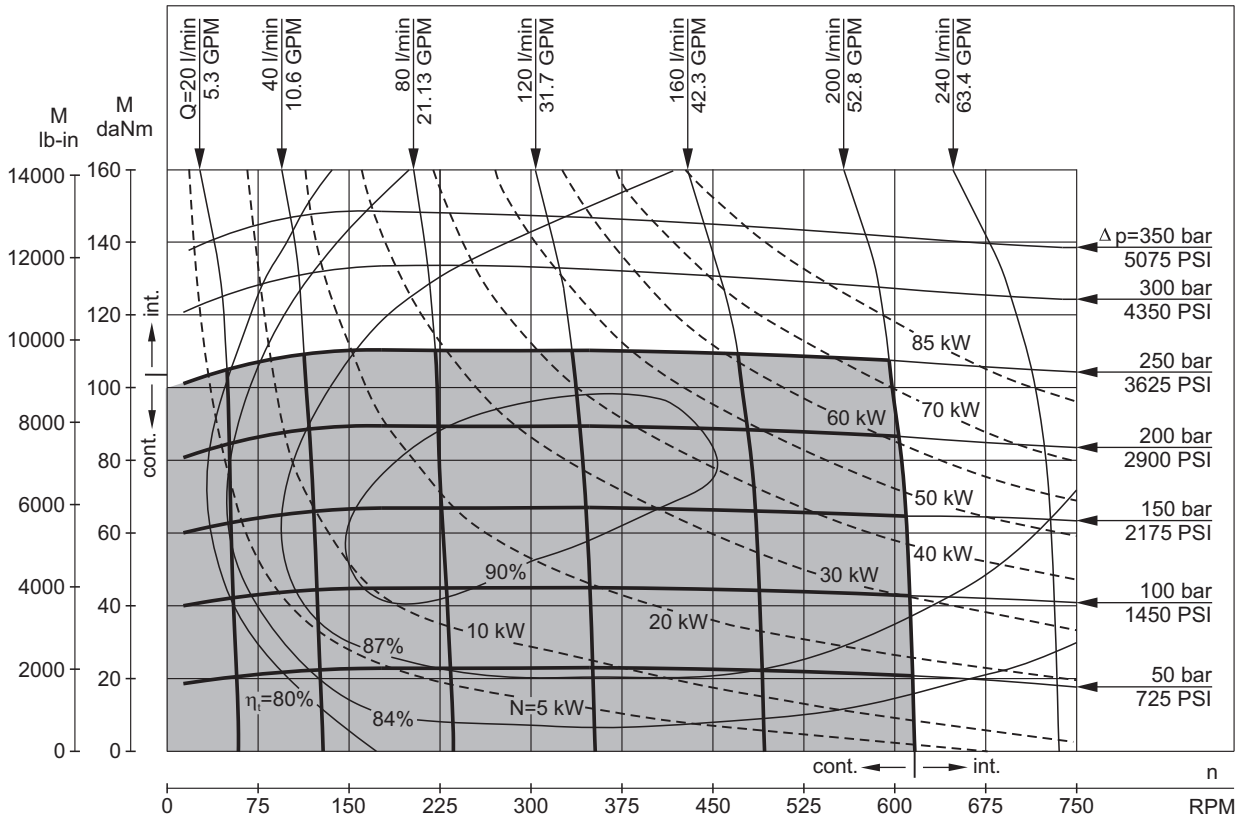


## MVM 400

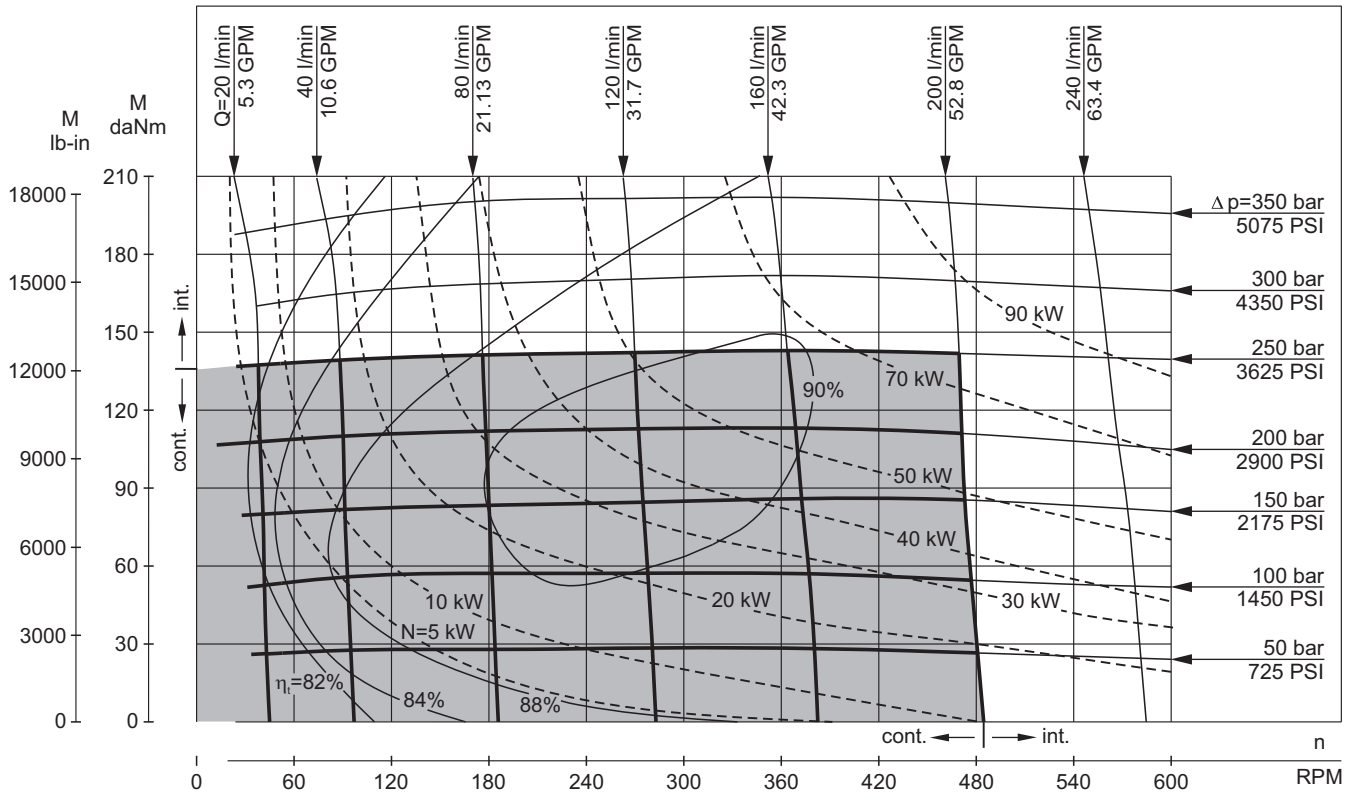


The function diagrams data is for average performance of randomly selected motors at back pressure 5÷10 bar [72.5 PSI÷145 PSI] and oil with viscosity of 32 mm²/s [150 SUS] at 50°C [122°F].

# FUNCTION DIAGRAMS

## MVM 500

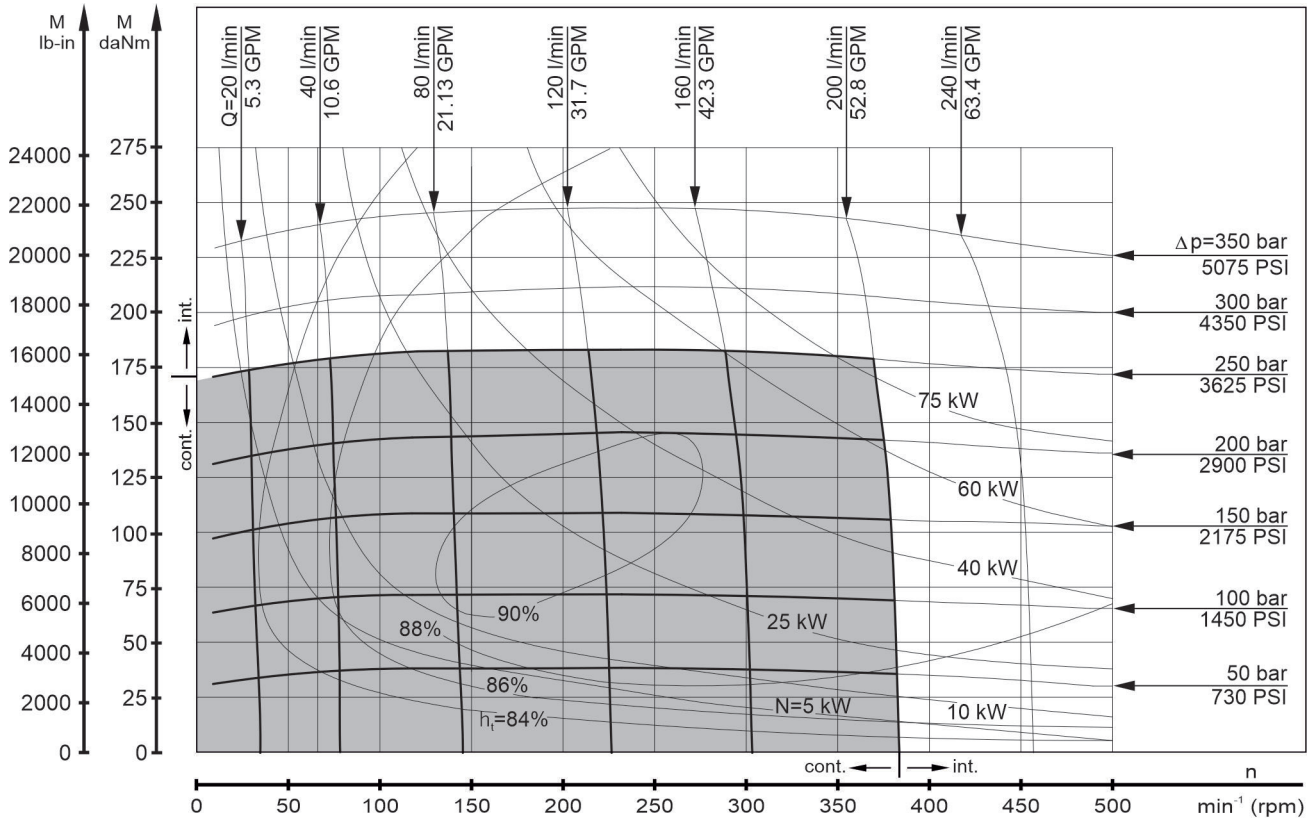


## MVM 630

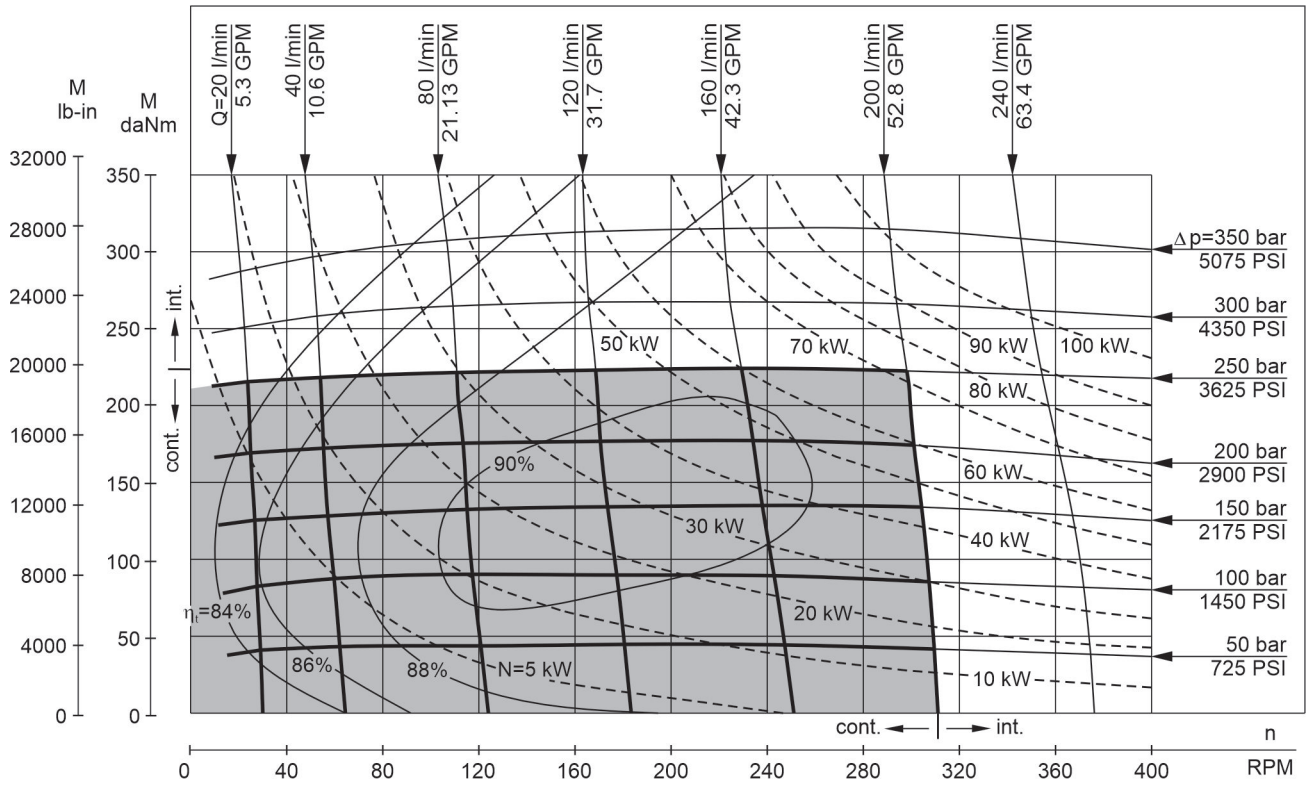


The function diagrams data is for average performance of randomly selected motors at back pressure 5÷10 bar [72.5 PSI÷145 PSI] and oil with viscosity of 32 mm²/s [150 SUS] at 50°C [122°F].

## FUNCTION DIAGRAMS

### MVM 800

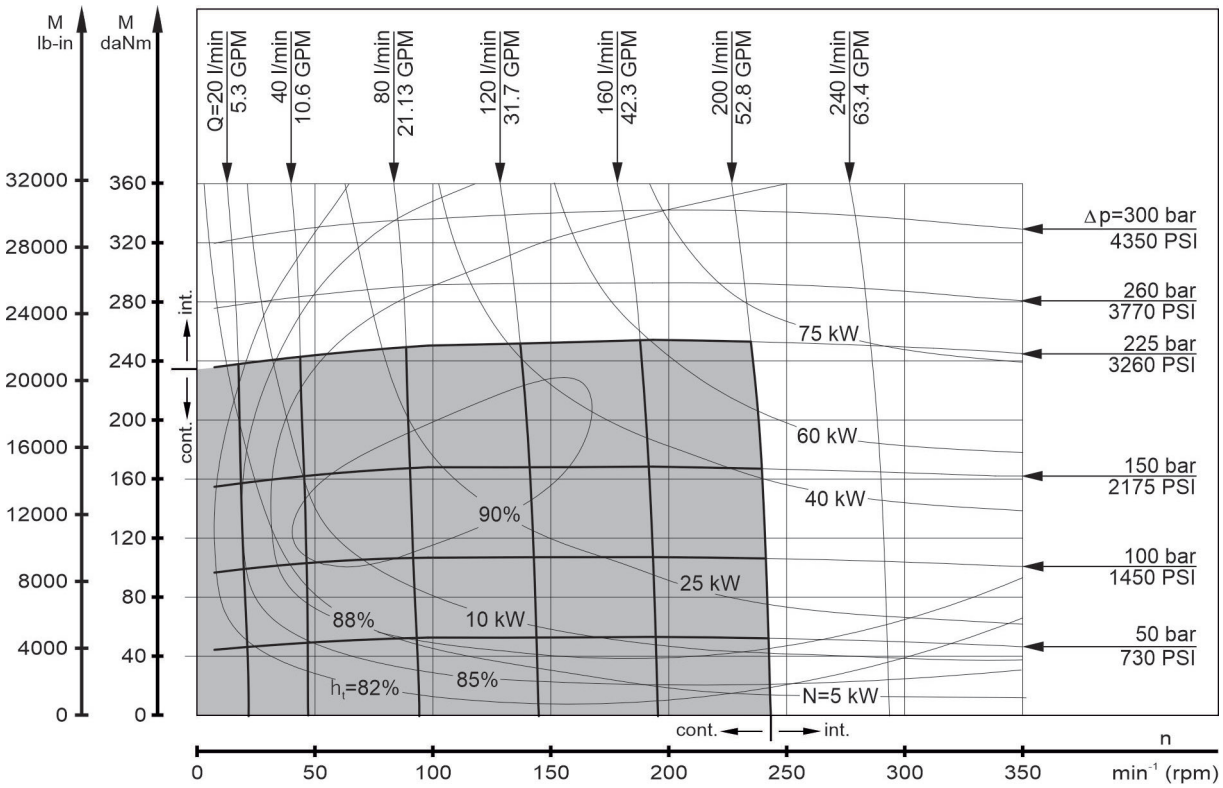


The function diagrams data is for average performance of randomly selected motors at back pressure 5÷10 bar [72.5 PSI÷145 PSI] and oil with viscosity of 32 mm²/s [150 SUS] at 50°C [122°F].

## PERMISSIBLE SHAFT LOADS

The output shaft runs in tapered bearings that permit high axial and radial forces. Curve "**1**" shows max. radial shaft load. Any shaft load exceeding the values shown by the curve will seriously reduce motor life. The two other curves apply to a B10 bearing life of 3000 hours at 200 RPM.

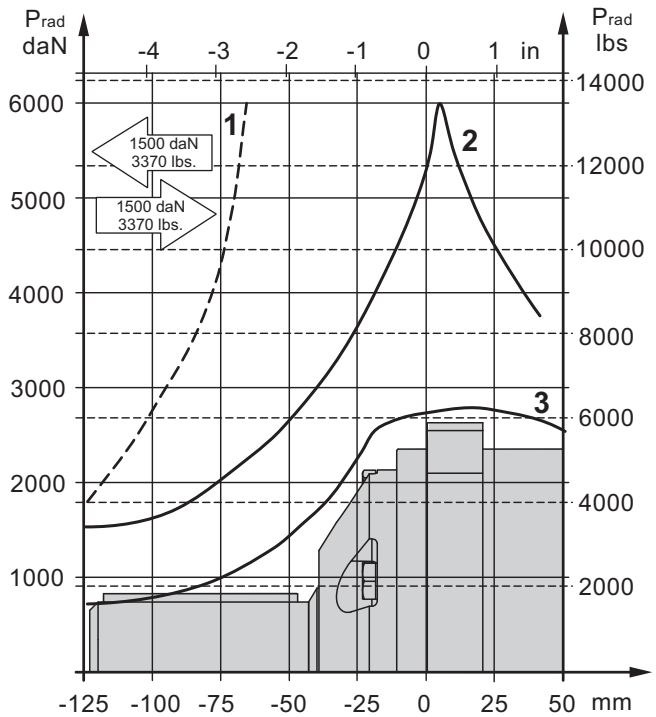


**3** - $P_a$=1500 daN [3370 lbs]

**2** - $P_a$=0 daN [0 lbs]

## DIMENSIONS and MOUNTING DATA for MVM and MVMC

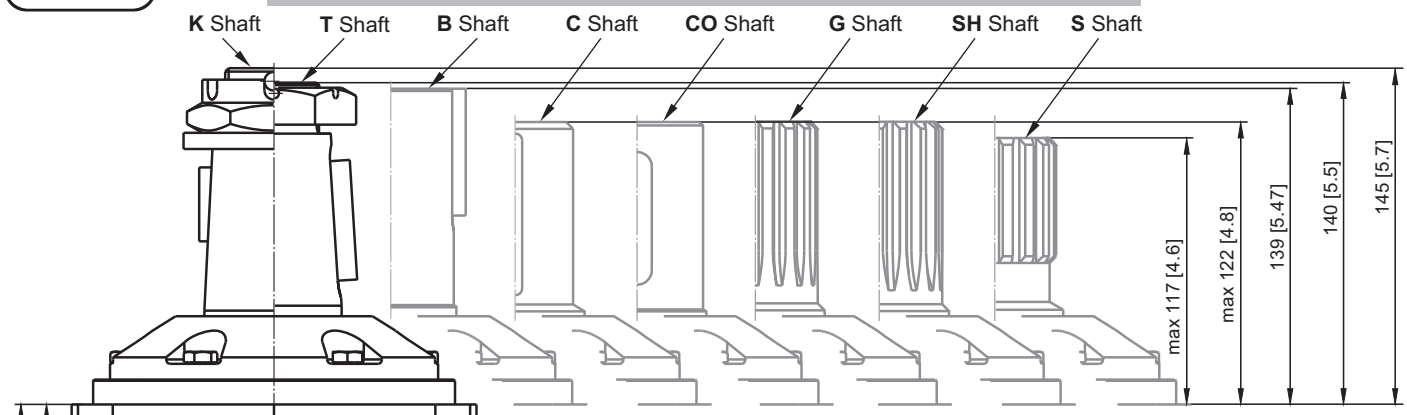


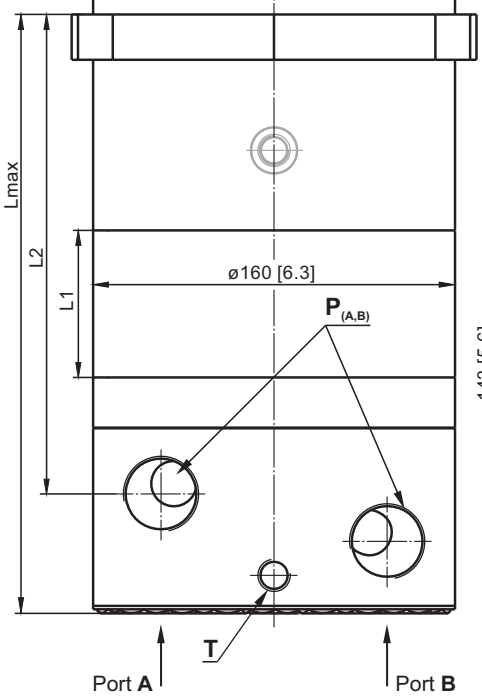


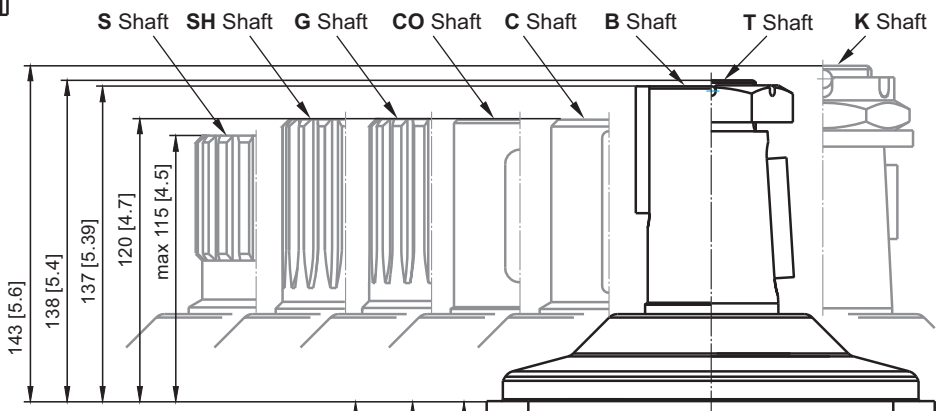


Port Dim.
See Page 60

Shaft Dim.
See Page 61

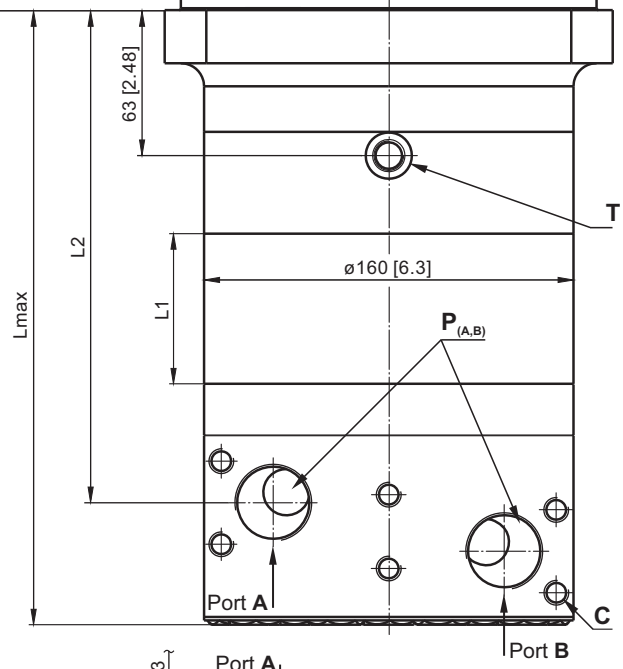


**Warning:** Drain line should always be used (if no check valves)!

| | Versions | | | |
|---|---|---|---|---|
| | 2 | 3 | 4 | 5 |
| $P_{(A,B)}$ | 2xG1<br>20 mm [.787]<br>depth | 2xG1<br>20 mm [.787]<br>depth | 2x1 5/16-12UN<br>20 mm [.787]<br>depth | 2x1”<br>(SAE PSI3000) |
| T | G¼<br>12 mm [.472]<br>depth | G¼<br>12 mm [.472]<br>depth | 9/16 -18UNF<br>13 mm [.512]<br>depth | G¼<br>12 mm [.472]<br>depth |
| C | - | 6xM10<br>15 mm [.59]<br>depth | - | 8xM10<br>13 mm [.512]<br>depth |

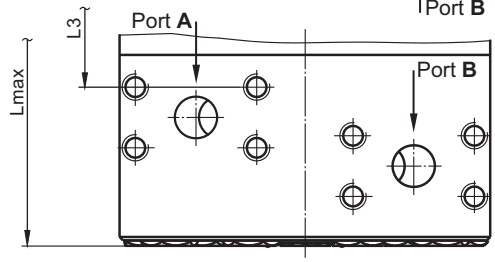


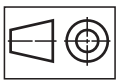

mm [in]

**Standard Rotation**
Viewed from Shaft End
Port **A** Pressurized - **CW**
Port **B** Pressurized - **CCW**

**Reverse Rotation**
Viewed from Shaft End
Port **A** Pressurized - **CCW**
Port **B** Pressurized - **CW**

| Type | $L_{max}$, mm [in] | $L_2$, mm [in] | $L_3$, mm [in] | Type | $L_{max}$, mm [in] | $L_2$, mm [in] | $L_3$, mm [in] | $L_1$, mm [in] |
|---|---|---|---|---|---|---|---|---|
| MVM 315 | 226,5 [8.92] | 172,5 [6.79] | 157,4 [6.20] | MVMC 315 | 227,5 [8.957] | 173,8 [6.84] | 158,7 [6.25] | 25,5 [1.00] |
| MVM 400 | 233,5 [9.19] | 179,5 [7.07] | 164,4 [6.47] | MVMC 400 | 234,5 [9.232] | 180,8 [7.12] | 165,7 [6.52] | 32,5 [1.28] |
| MVM 500 | 241,5 [9.51] | 187,5 [7.38] | 172,4 [6.79] | MVMC 500 | 242,5 [9.547] | 188,8 [7.43] | 173,7 [6.84] | 40,5 [1.59] |
| MVM 630 | 252,0 [9.92] | 198,0 [7.79] | 182,9 [7.20] | MVMC 630 | 253,0 [9.961] | 199,3 [7.85] | 184,2 [7.25] | 51,0 [2.01] |
| MVM 800 | 266,0 [10.47] | 212,0 [8.35] | 196,9 [7.75] | MVMC 800 | 267,0 [10.518] | 213,3 [8.39] | 198,2 [7.80] | 65,0 [2.56] |

## DIMENSIONS and MOUNTING DATA MVMCA

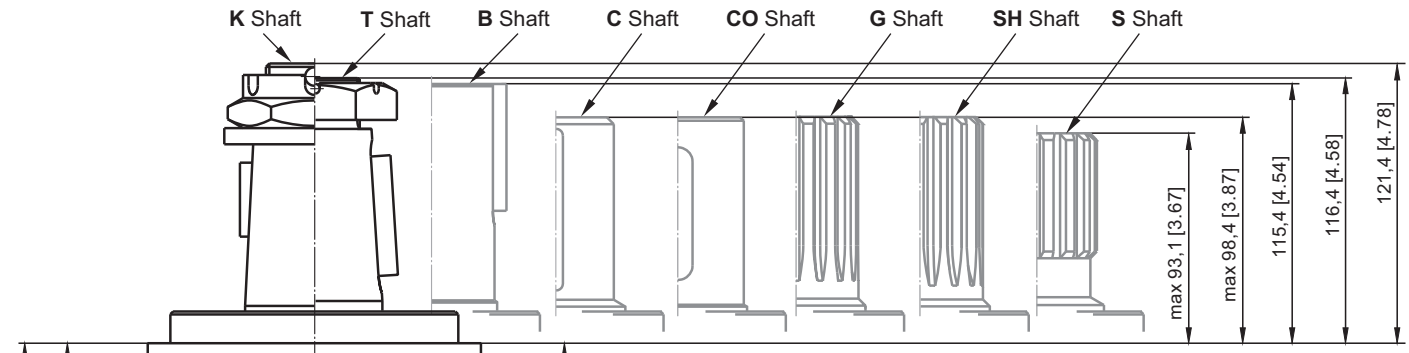


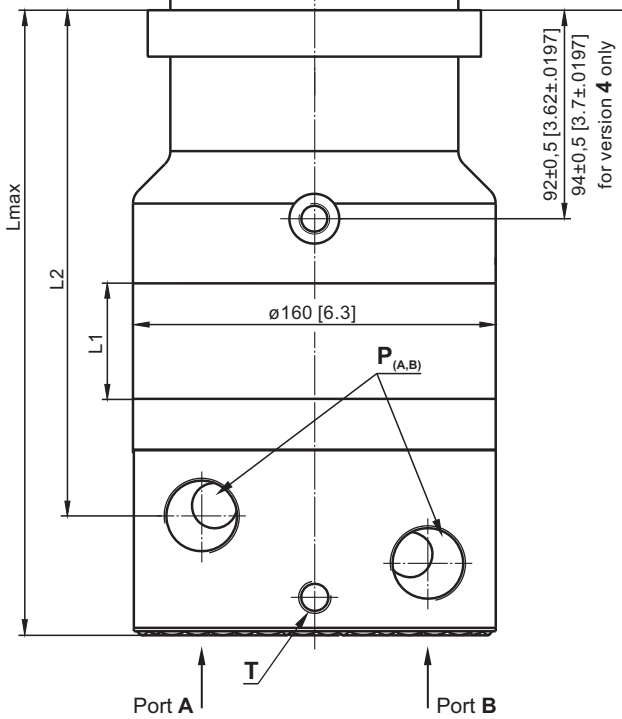


Port Dim.
See Page 60

Shaft Dim.
See Page 61

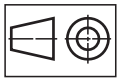

mm [in]

**Warning:** Drain line should always be used (if no check valves)!

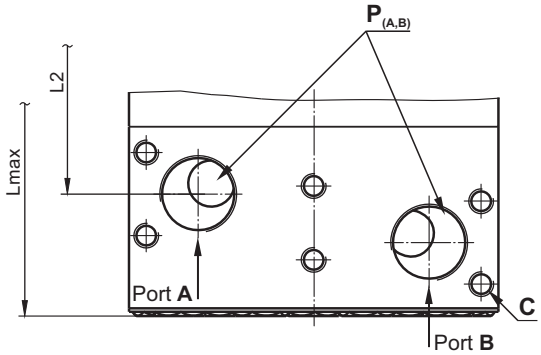


| | Versions | | | |
|---|---|---|---|---|
| | 2 | 3 | 4 | 5 |
| $P_{(A,B)}$ | 2xG1<br>20 mm [.787] depth | 2xG1<br>20 mm [.787] depth | 2x1 5/16-12UN<br>20 mm [.787] depth | 2x1”<br>(SAE PSI3000) |
| T | G¼<br>12 mm [.472] depth | G¼<br>12 mm [.472] depth | 9/16 -18UNF<br>13 mm [.512] depth | G¼<br>12 mm [.472] depth |
| C | - | 6xM10<br>15 mm [.59] depth | - | 8xM10<br>13 mm [.512] depth |

**Standard Rotation**
Viewed from Shaft End
Port **A** Pressurized - **CW**
Port **B** Pressurized - **CCW**

**Reverse Rotation**
Viewed from Shaft End
Port **A** Pressurized - **CCW**
Port **B** Pressurized - **CW**

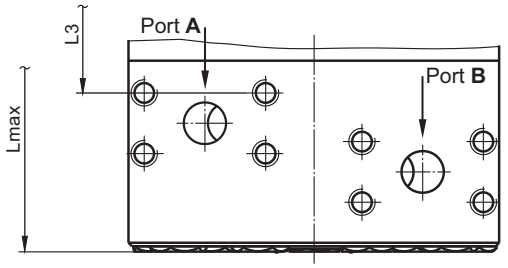


| Type | $L_{max}$, mm [in] | $L_2$, mm [in] | $L_3$, mm [in] | $L_1$, mm [in] |
|---|---|---|---|---|
| MVMCA 315 | 251,5 [ 9.90] | 197,5 [7.78] | 182,4 [7.18] | 25,5 [1.00] |
| MVMCA 400 | 258,5 [10.18] | 204,5 [8.05] | 189,4 [7.46] | 32,5 [1.28] |
| MVMCA 500 | 266,5 [10.49] | 212,5 [8.37] | 197,4 [7.77] | 40,5 [1.59] |
| MVMCA 630 | 277,0 [10.91] | 223,0 [8.78] | 207,9 [8.19] | 51,0 [2.01] |
| MVMCA 800 | 291,0 [11.46] | 237,0 [9.33] | 221,9 [8.74] | 65,0 [2.56] |

# MOUNTING

Square Mount (four holes)

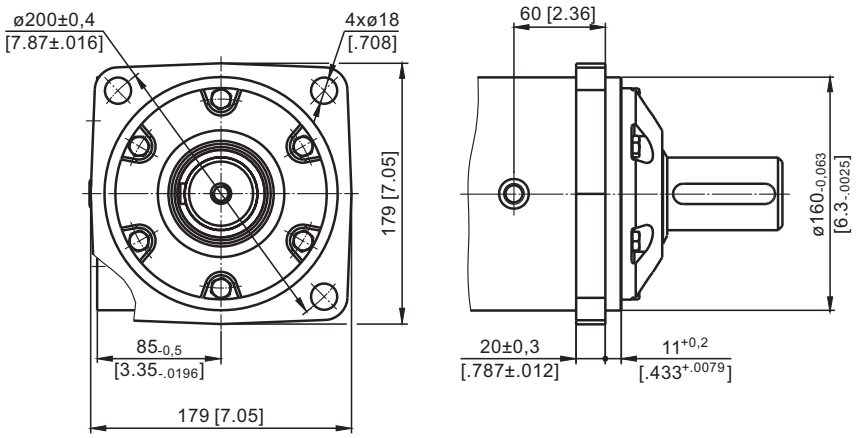


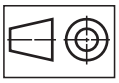

mm [in]

**C** Square Mount (four holes)

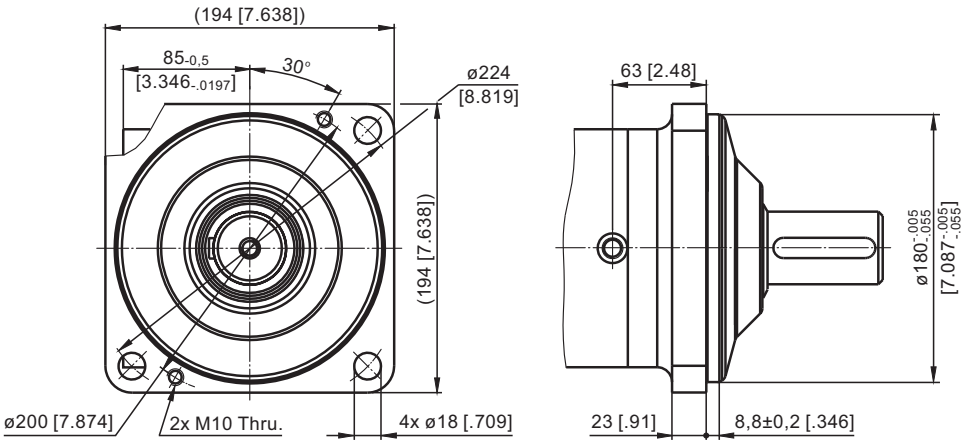


**CA** Square Mount (four holes)

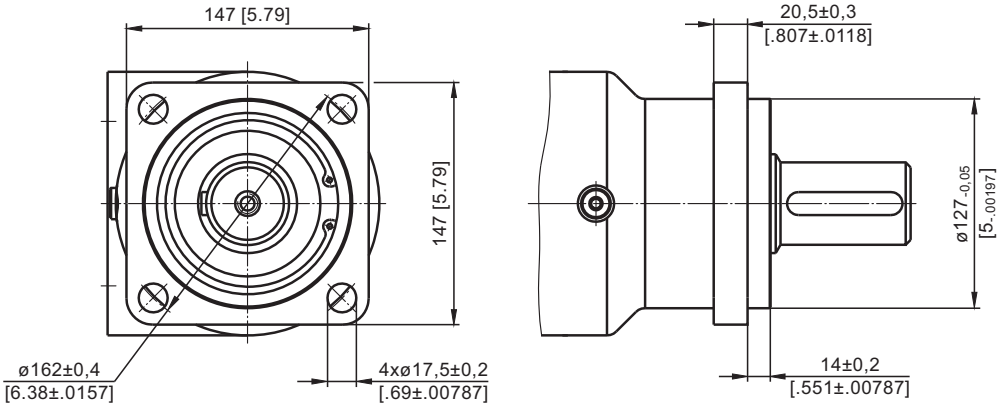

## PORTS

Side Ports

Versions 2 4

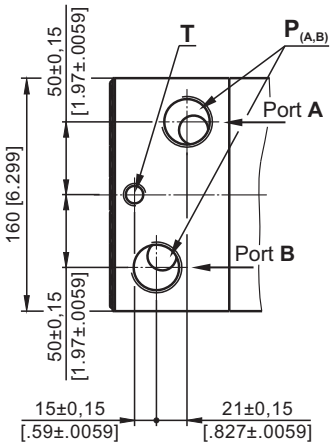


Versions 3

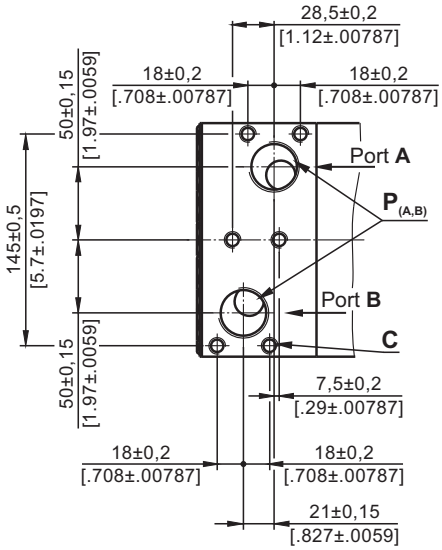


Versions 5

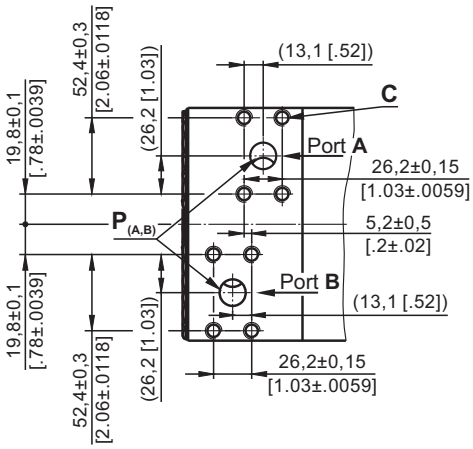


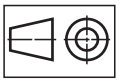

mm [in]

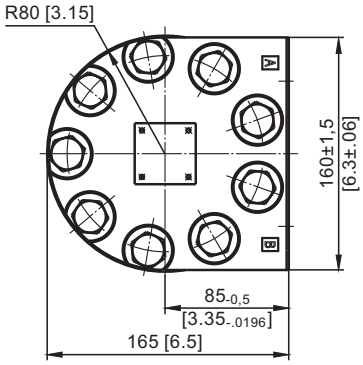


**Standard Rotation**
Viewed from Shaft End
Port **A** Pressurized - **CW**
Port **B** Pressurized - **CCW**

**Reverse Rotation**
Viewed from Shaft End
Port **A** Pressurized - **CCW**
Port **B** Pressurized - **CW**

| | Versions | | | |
|---|---|---|---|---|
| | 2 | 3 | 4 | 5 |
| **P(A,B)** | 2xG1 | 2xG1 | 2x1 5/16-12UN | 2x1" (SAE PSI3000) |
| **T** | G¼ | G¼ | 9/16-18UNF | G¼ |
| **C** | - | 6xM10 | - | 8xM10 |

## MAX. PERMISSIBLE SHAFT SEAL PRESSURE

**Max. return pressure without drain line or max. pressure in the drain line**

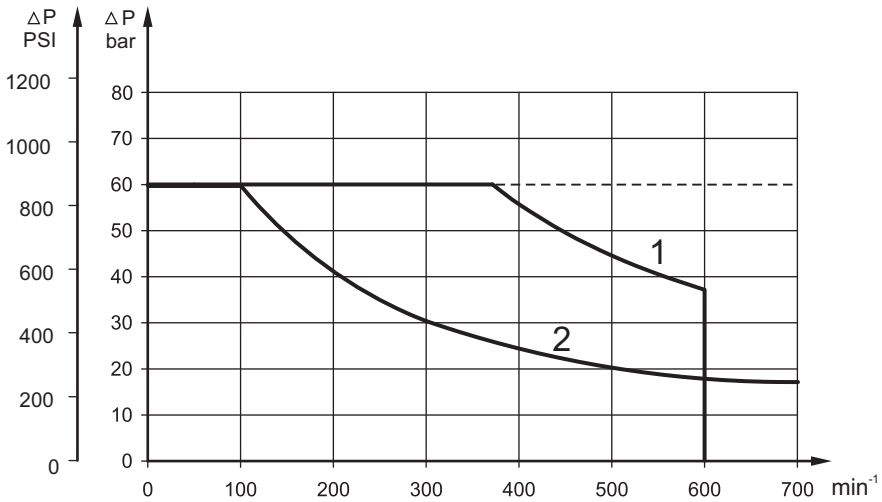


1: Drawing for High Pressure Seal ("U" Seal)

2: Drawing for Standard Shaft Seal

——— - continuous operations

- - - - - - intermittent operations

# SHAFT EXTENSIONS

**C** - ø50 straight, Parallel key A14x9x70 DIN 6885
Max. Torque 271,2 daNm [24000 lb-in]

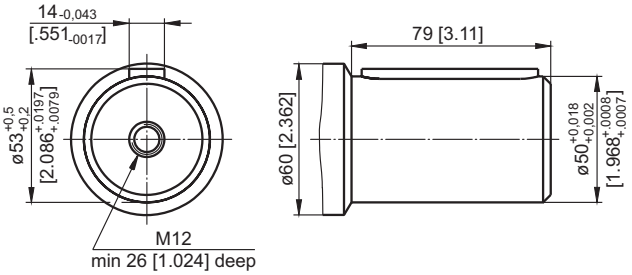


**CO** - ø2¼" [57,15] straight, Parallel key ½ "x½"x 2¼" BS46
Max. Torque 271,2 daNm [24000 lb-in]

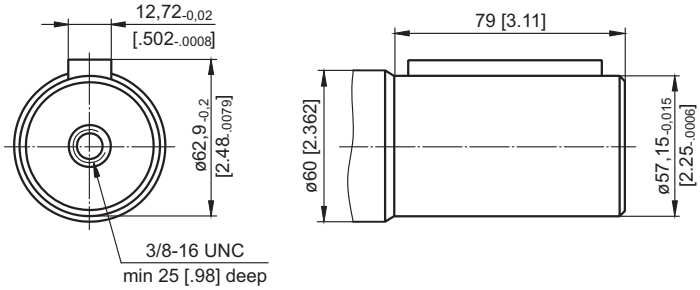


**SH** - ø2⅛" (ø53,975) splined 16 DP 8/16 ANS B92.1-1976
Max. Torque 271,2 daNm [24000 lb-in]

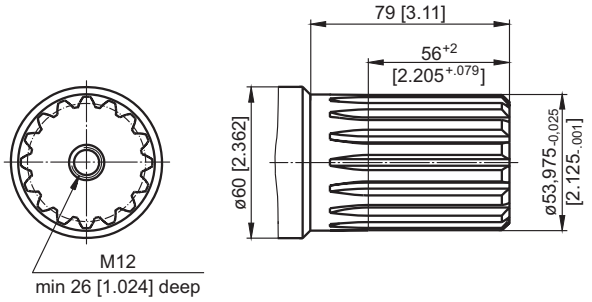


**B** - ø2¼" [57,15] straight, Parallel key ½ "x½"x 2¼" BS46
Max. Torque 271,2 daNm [24000 lb-in]

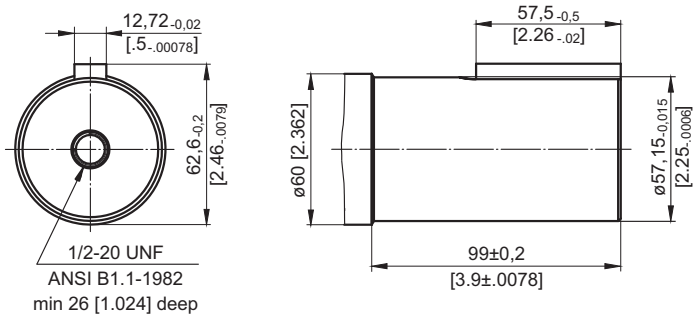


**G** - ø2⅛" (ø53,975) splined 16 DP 8/16 ANS B92.1-1976
Max. Torque 271,2 daNm [24000 lb-in]

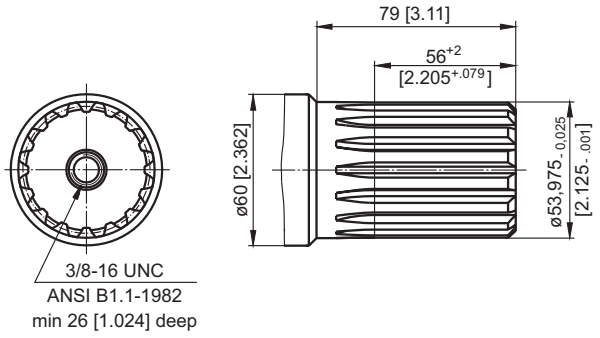


**K** - ø60, tapered 1:10, Parallel key B16x10x32 DIN 6885
Max. Torque 271,2 daNm [24000 lb-in]

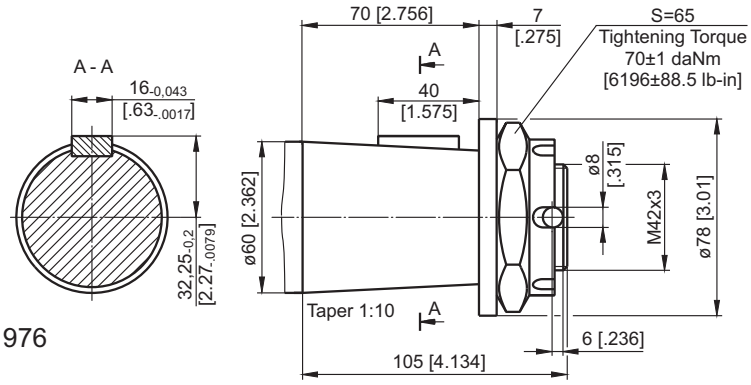


**S** - ø2⅛" (ø53,975) splined 16 DP 8/16 ANS B92.1-1976
Max. Torque 271,2 daNm [24000 lb-in]

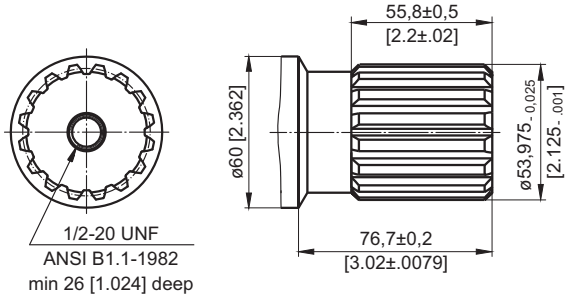


**T** - ø2¼" [57,15] SAE J501, tapered 1:8, key 9/16"x9/16"x2" BS46
Max. Torque 271,2 daNm [24000 lb-in]

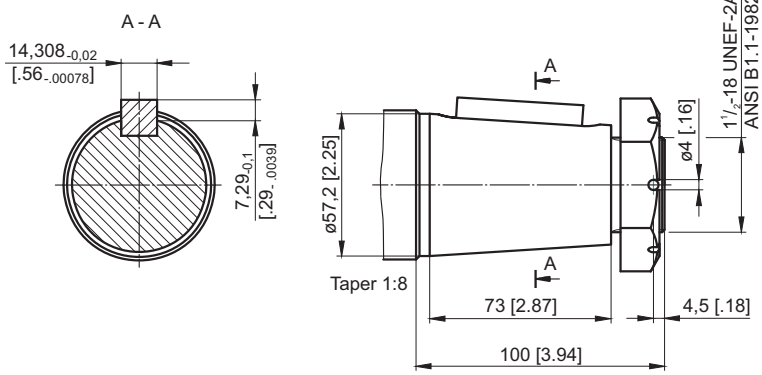


mm [in]

## ORDER CODE

| | 1 | 2 | 3 | 4 | 5 | 6 | 7 | 8 |
|---|---|---|---|---|---|---|---|---|
| **M V M** | | | | | | | **HD** | |

**Pos.1 - Mounting Flange**

omit - Standard square mount, four holes
**C** - Square mount, four holes
**CA** - Square mount, four holes

**Pos.2 - Displacement code**

**315** - 314,5 $cm^3$/rev [19.80 $in^3$/rev]
**400** - 400,9 $cm^3$/rev [24.45 $in^3$/rev]
**500** - 499,6 $cm^3$/rev [30.48 $in^3$/rev]
**630** - 629,1 $cm^3$/rev [38.38 $in^3$/rev]
**800** - 801,8 $cm^3$/rev [48.91 $in^3$/rev]

**Pos.3 - Shaft Extensions***

**C** - ø50 straight, Parallel key A14x9x70 DIN6885
**CO** - ø2¼" [57,15] straight, Parallel key $^1/_2$"x$^1/_2$"x2¼" BS46
**B** - ø2¼" [57,15] straight, Parallel key $^1/_2$"x$^1/_2$"x2¼" BS46
**SH** - ø2$^1/_8$" [53,975] splined, 16DP 8/16 ANS B92.1-1976
**G** - ø2$^1/_8$" [53,975] splined, 16DP 8/16 ANS B92.1-1976
**S** - ø2$^1/_8$" [53,975] splined, 16DP 8/16 ANS B92.1-1976
**K** - ø60 tapered 1:10, Parallel key B16x10x32 DIN6885
**T** - ø2¼" [57,15] SAE J501, tapered 1:8, key $^9/_{16}$"x$^9/_{16}$"x2" BS46

**Pos.4 - Ports**

**2** - side ports 2xG1, G1/4, BSP thread, ISO 228
**3** - side ports 2xG1, G1/4, BSP thread, ISO 228, 6xM10
**4** - side ports 2x1 5/16-12 UN, O-ring, 9/16-18 UNF
**5** - side ports 2x1" (SAE PSI3000), G1/4, BSP thread, ISO 228, 8xM10

**Pos.5 - Check Valves**

omit - without check valves
**1** - with check valves

**Pos.6 - Shaft Seal Version**

omit - Low pressure shaft seal
**U** - High pressure shaft seal

**Pos.7 - Special Features**

**HD** - Reinforced motor **HD****
For Other **Special Features** see page 69

**Pos.8 - Design Series**

omit - Factory specified

**NOTES:**

* The permissible output torque for shafts must not be exceeded!
** Drain line should always be used (if no check valves).

The hydraulic motors are mangano-phosphatized as standard.

# HYDRAULIC MOTORS VMF

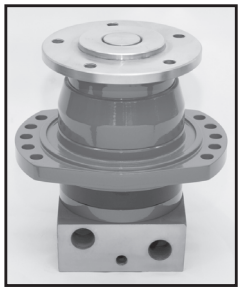

## APPLICATION

» Marine equipment
» Forestry equipment
» Metal working machines
» Agricultural machines
» Road building machines
» Mining machinery
» Special vehicles etc.

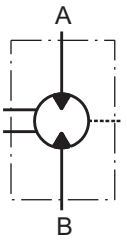


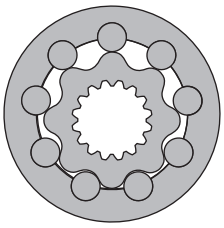

## CONTENTS

Specification data ..... 64
Function diagrams ..... 65÷67
Permissible shaft loads ..... 67
Dimensions and mounting ..... 68
Permissible shaft seal pressure ..... 68
Order code ..... 68

## OPTIONS

» Model - Disc valve, roll-gerotor
» Wheel mounting flange
» Side ports
» Shaft - thread hole flange
» SAE and BSPP ports
» Other special features

## GENERAL

| | |
|---|---|
| **Max. Displacement,** $cm^3$/rev [$in^3$/rev] | 801,8 [48.91] |
| **Max. Speed,** [RPM] | 736 |
| **Max. Torque,** daNm [lb-in] | cont.: 259 [22920] int.: 340 [30090] |
| **Max. Output,** kW [HP] | 112 [150] |
| **Max. Pressure Drop,** bar [PSI] | cont.: 250 [3630] int.: 350 [5080] |
| **Max. Oil Flow,** lpm [GPM] | 240 [63.4] |
| **Min. Speed,** [RPM] | 5 |
| **Permissible Shaft Loads,** daN [lbs] | $P_a$=1500 [3370] |
| **Pressure fluid** | Mineral based- HLP(DIN 51524) or HM(ISO 6743/4) |
| **Temperature range,** $^oC$ [$^oF$] | -40÷140 [-40÷284] |
| **Optimal Viscosity range,** $mm^2$/s [SUS] | 20÷75 [98÷347] |
| **Filtration** | ISO code: 18/16/13 According to ISO 4406-1999 |

**Oil flow in drain line**

| Pressure drop bar [PSI] | Viscosity $mm^2$/s [SUS] | Oil flow in drain line lpm [GPM] |
|---|---|---|
| 140 [2030] | 20 [98] | 3 [.793] |
| | 35 [164] | 2 [.528] |
| 210 [3045] | 20 [98] | 6 [1.585] |
| | 35 [164] | 4 [1.057] |

**Pressure Losses**

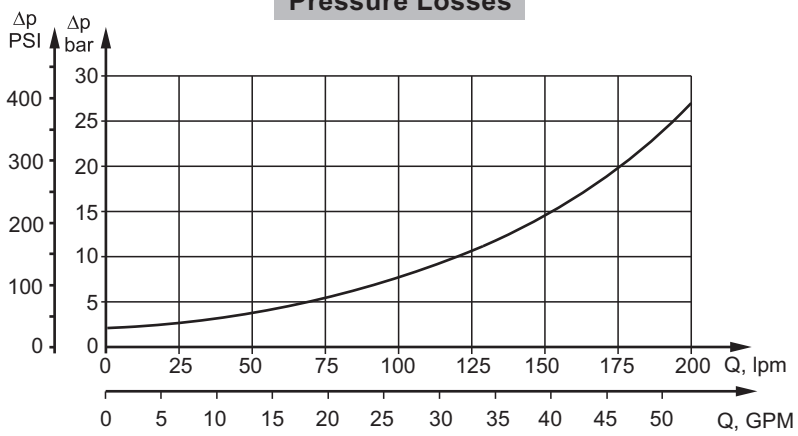

## SPECIFICATION DATA

| Type | | VMF 315 | VMF 400 | VMF 500 | VMF 630 | VMF 800 |
|---|---|---|---|---|---|---|
| **Displacement, $cm^3$/rev [$in^3$/rev]** | | 314,5 [19.18] | 400,9 [24.5] | 499,6 [30.5] | 629,1 [38.38] | 801,8 [48.91] |
| **Max. Speed, [RPM]** | Cont. | 636 | 500 | 400 | 315 | 250 |
| | Int.* | 736 | 600 | 480 | 380 | 300 |
| **Max. Torque, daNm [lb-in]** | Cont. | 115 [10180] | 144 [12745] | 180 [15930] | 227 [20090] | 259 [22920] |
| | Int.* | 160 [14160] | 200 [17700] | 260 [23010] | 310 [27440] | 340 [30090] |
| | Peak** | 180 [15930] | 230 [20355] | 286 [25315] | 360 [31860] | 402 [35580] |
| **Max. Output, kW [HP]** | Cont. | 67 [90] | 67 [90] | 67 [90] | 67 [90] | 67 [90] |
| | Int.* | 112 [150] | 112 [150] | 112 [150] | 112 [150] | 112 [150] |
| **Max. Pressure Drop, bar [PSI]** | Cont. | 250 [3630] | 250 [3630] | 250 [3630] | 250 [3630] | 250 [3630] |
| | Int.* | 350 [5080] | 350 [5080] | 350 [5080] | 350 [5080] | 350 [5080] |
| | Peak** | 400 [5800] | 400 [5800] | 400 [5800] | 400 [5800] | 400 [5800] |
| **Max. Oil Flow, lpm [GPM]** | Cont. | 200 [52.8] | 200 [52.8] | 200 [52.8] | 200 [52.8] | 200 [52.8] |
| | Int.* | 240 [63.4] | 240 [63.4] | 240 [63.4] | 240 [63.4] | 240 [63.4] |
| **Max. Inlet Pressure, bar [PSI]** | Cont. | 270 [3915] | 270 [3915] | 270 [3915] | 270 [3915] | 270 [3915] |
| | Int.* | 370 [5365] | 370 [5365] | 370 [5365] | 370 [5365] | 370 [5365] |
| | Peak** | 420 [6090] | 420 [6090] | 420 [6090] | 420 [6090] | 420 [6090] |
| **Max. Return Pressure with Drain Line, bar [PSI]** | Cont. | 140 [2030] | 140 [2030] | 140 [2030] | 140 [2030] | 140 [2030] |
| | Int.* | 175 [2540] | 175 [2540] | 175 [2540] | 175 [2540] | 175 [2540] |
| | Peak** | 210 [3045] | 210 [3045] | 210 [3045] | 210 [3045] | 210 [3045] |
| **Max. Starting Pressure with Unloaded Shaft, bar [PSI]** | | 5 [70] | 5 [70] | 5 [70] | 5 [70] | 5 [70] |
| **Min. Starting Torque, daNm [lb-in]** | | 92 [8140] | 115 [10180] | 144 [12745] | 180 [15930] | 205 [18145] |
| **Min. Speed***, [RPM]** | | 10 | 6 | 8 | 6 | 5 |
| **Weight, kg [lb]** | | 46 [101.4] | 47,2 [104,1] | 48,5 [106.9] | 50 [110.2] | 51,5 [113.5] |

* Intermittent operation: the permissible values may occur for max. 10% of every minute.
** Peak load: the permissible values may occur for max. 1% of every minute.
*** For speeds lower than given, consult factory or your regional manager.

1. Intermittent speed and intermittent pressure must not occur simultaneously.
2. Recommended filtration is per ISO cleanliness code 20/16. A nominal filtration of 25 micron or better.
3. Recommend using a premium quality, anti-wear type mineral based hydraulic oil HLP(DIN51524) or HM ( ISO 6743/4). If using synthetic fluids consult the factory for alternative seal materials.
4. Recommended minimum oil viscosity 13 $mm^2/s$ [70 SUS] at 50°C [122°F].
5. Recommended maximum system operating temperature is 82°C [180°F].
6. To assure optimum motor life fill with fluid prior to loading and run at moderate load and speed for 10-15 minutes.

# FUNCTION DIAGRAMS

## VMF 315

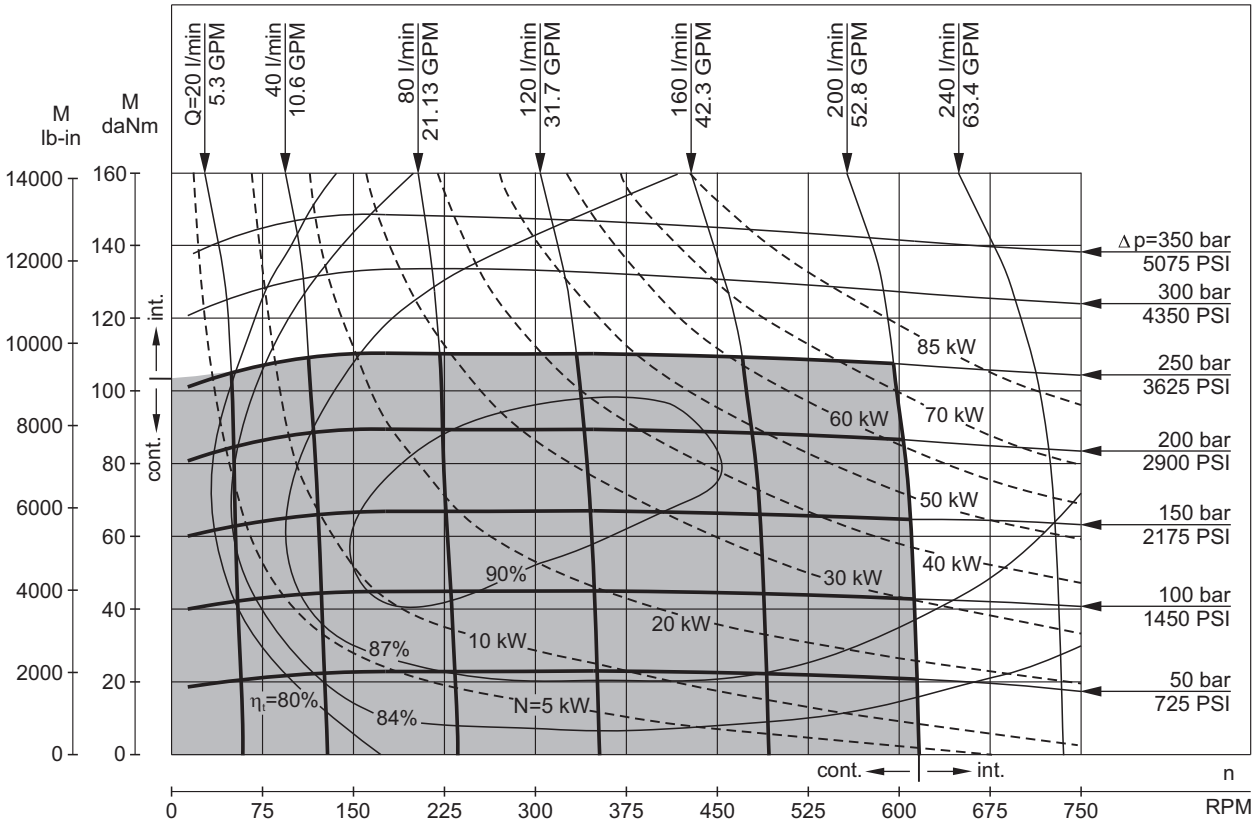


## VMF 400

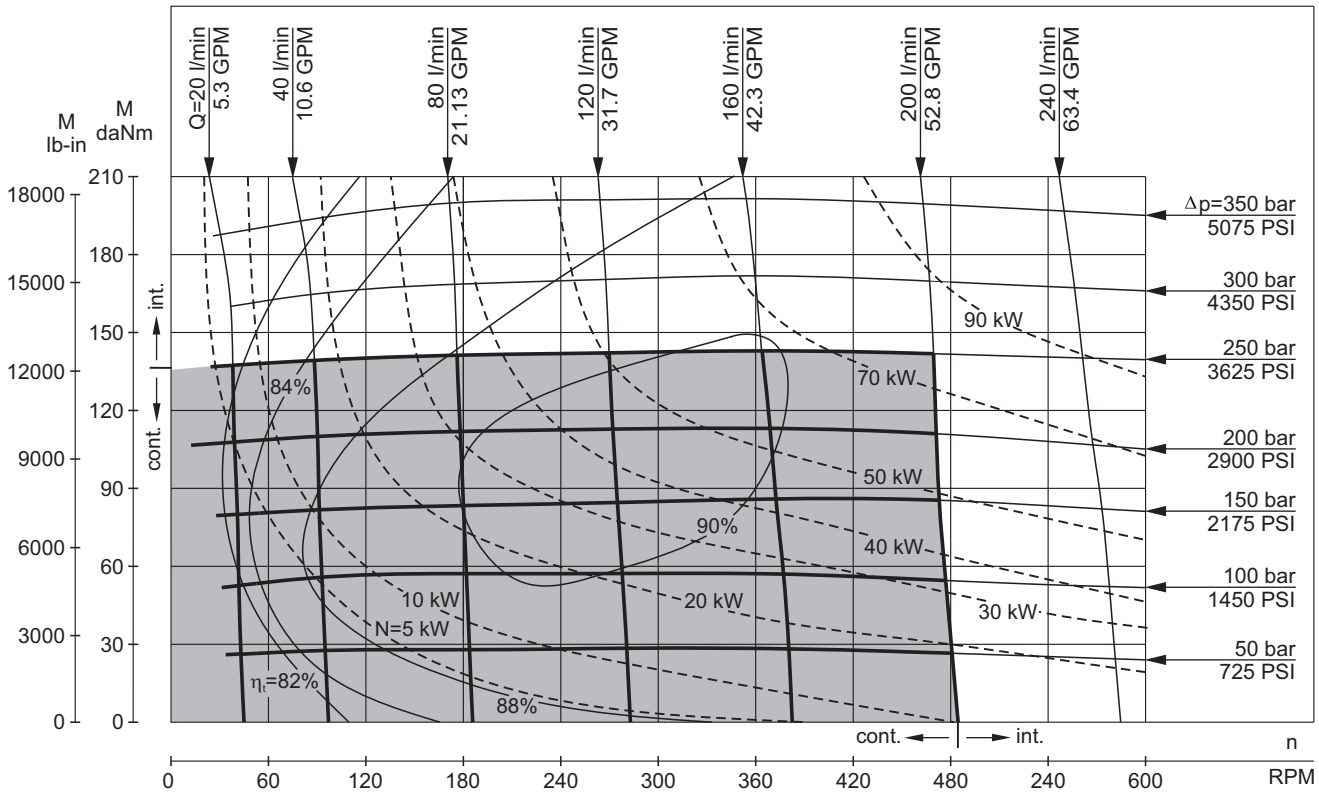


The function diagrams data was collected at back pressure 5÷10 bar (72.5PSI÷145PSI) and oil with viscosity of 32 mm²/s [150SUS] at 50° C [122°F].

# FUNCTION DIAGRAMS

## VMF 500

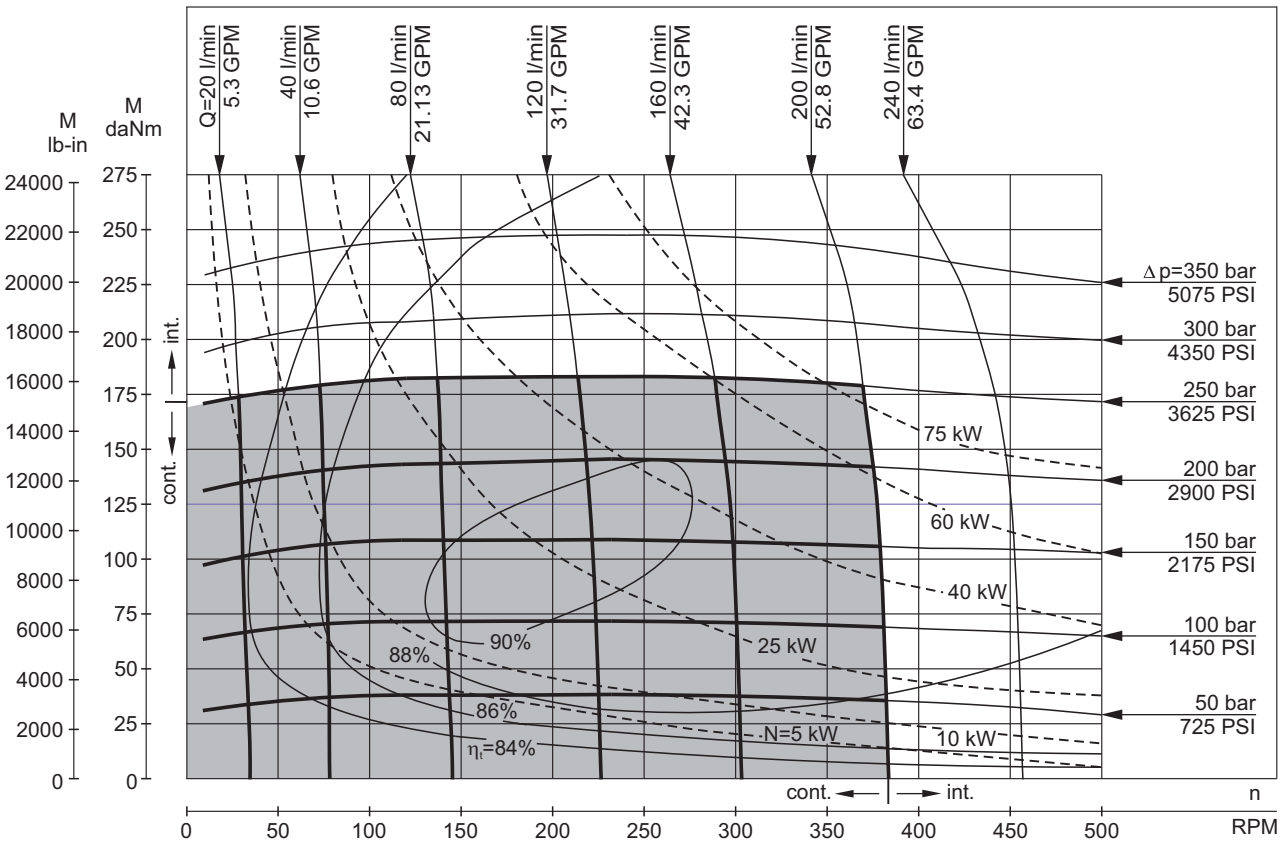


## VMF 630

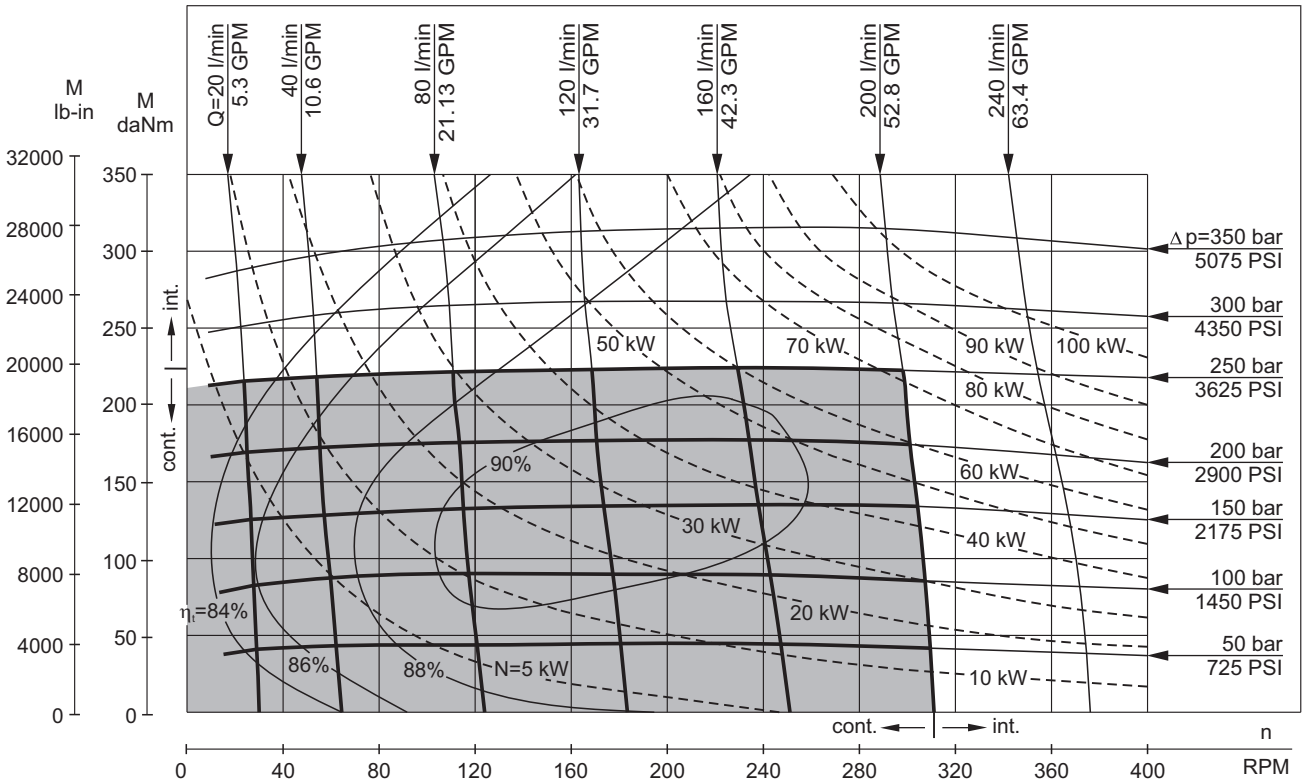


The function diagrams data was collected at back pressure 5÷10 bar (72.5 PSI÷145 PSI) and oil with viscosity of 32 mm²/s [150 SUS] at 50°C [122°F].

## FUNCTION DIAGRAMS

### VMF 800

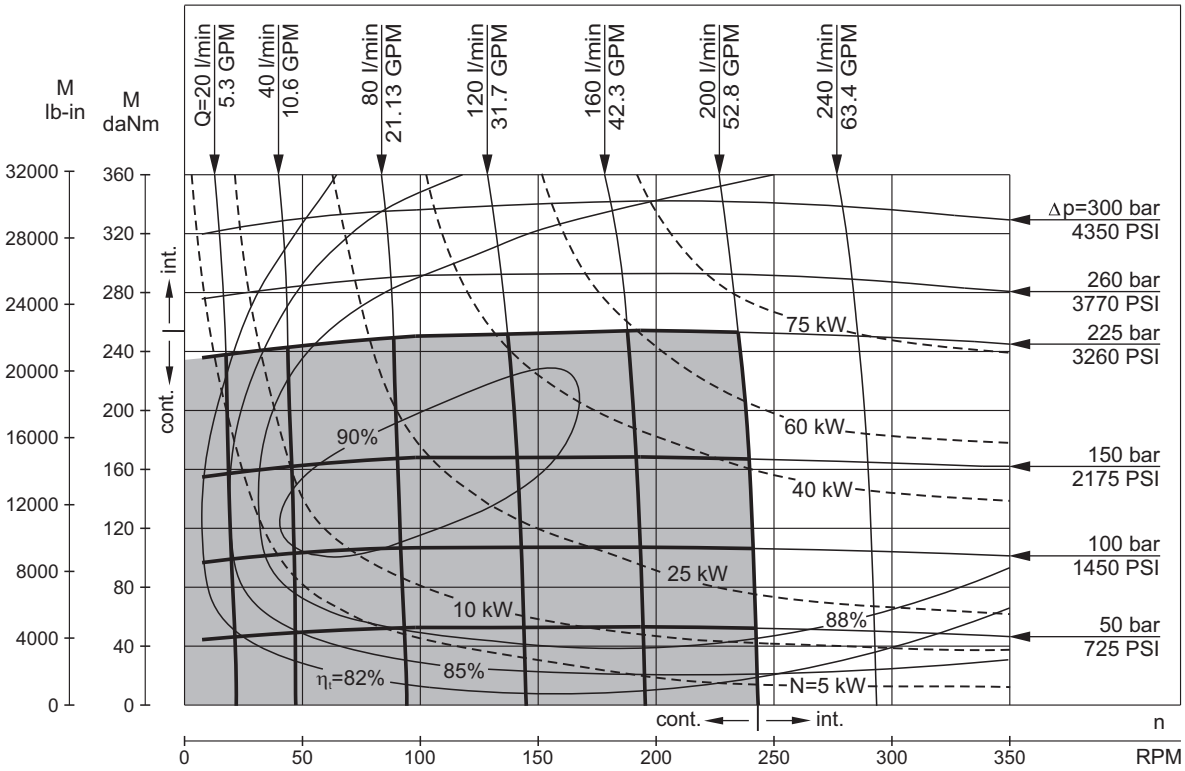


The function diagrams data was collected at back pressure 5÷10 bar (72.5PSI÷145PSI) and oil with viscosity of 32 mm²/s [150SUS] at 50° C [122°F].

## PERMISSIBLE SHAFT LOADS

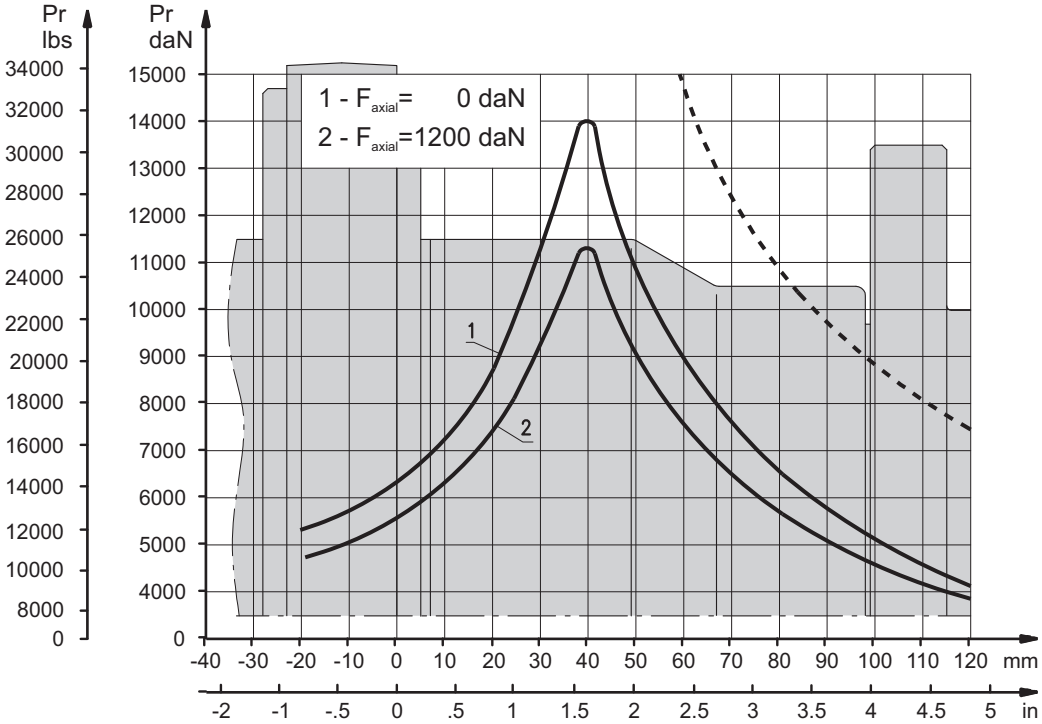


**1** - Bearing curve: The curve applies to a B10 bearing life of 2000 hours at 100 RPM.

**2** - Shaft curve: The curve represents Max. permissible radial shaft load with safety factor 2:1.

## DIMENSIONS and MOUNTING DATA

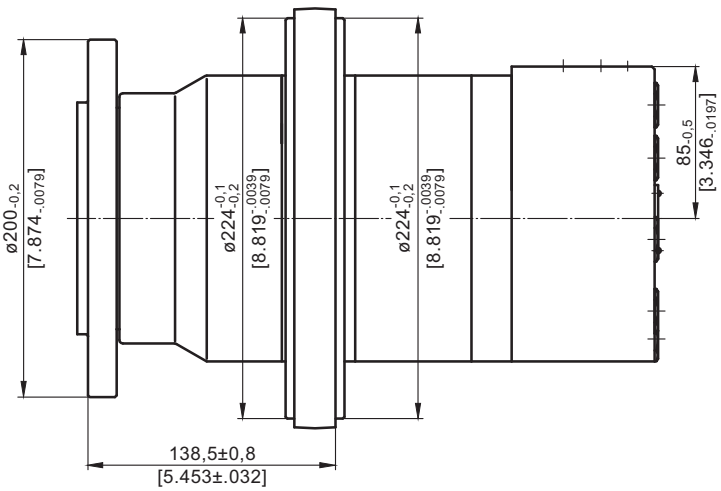


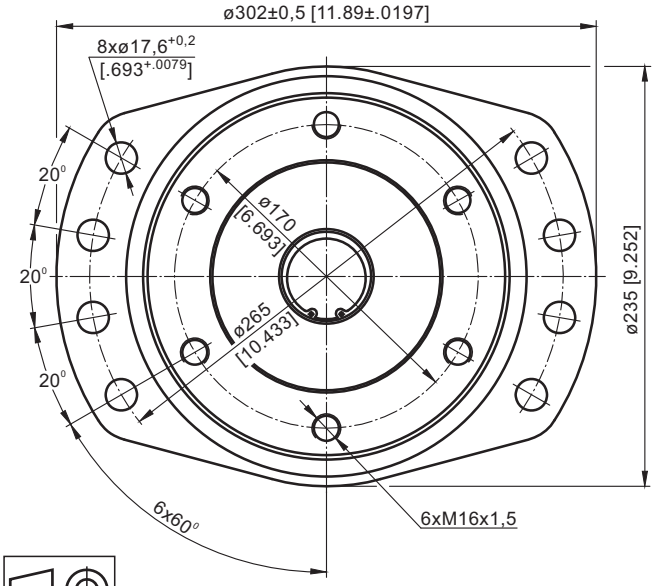


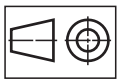

mm [in]

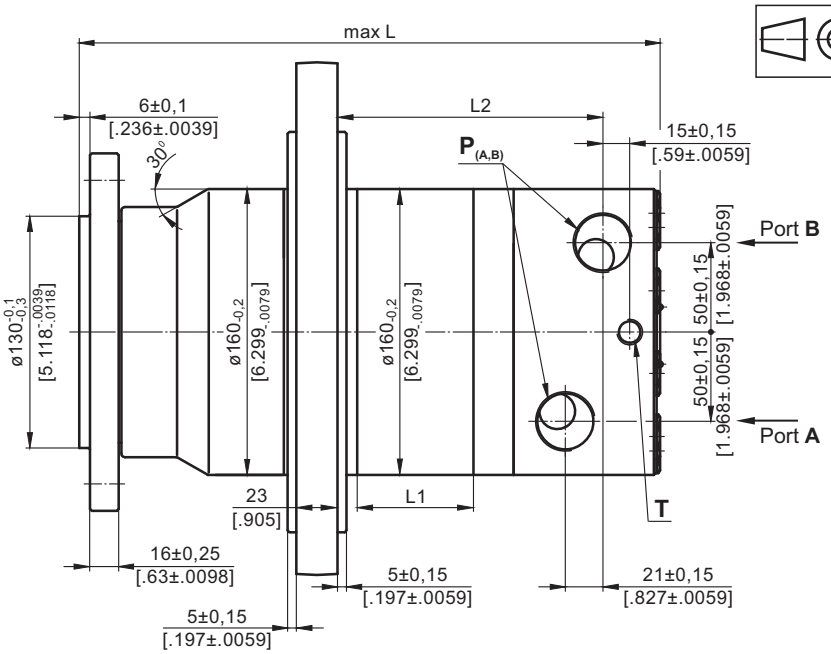


| | Versions | |
|---|---|---|
| | 2 | 4 |
| $P_{(A,B)}$ | 2xG1 | 2x1 5/16-12UN |
| T | G¼ | 9/16-18UNF |

| Type | L, mm [in] | L1, mm [in] | L2, mm [in] |
|---|---|---|---|
| **VMF 315** | 286,5 [11.28] | 25,5 [1.00] | 109,5 [4.31] |
| **VMF 400** | 293,5 [11.56] | 32,5 [1.28] | 116,5 [4.59] |
| **VMF 500** | 301,5 [11.87] | 40,5 [1.59] | 124,5 [4.90] |
| **VMF 630** | 312,0 [12.28] | 51,0 [2.01] | 135,0 [5.31] |
| **VMF 800** | 326,0 [12.83] | 65,0 [2.56] | 149,0 [5.87] |

**Warning:** Drain line should always be used.

**Standard Rotation**
Viewed from Shaft End
Port **A** Pressurized - **CW**
Port **B** Pressurized - **CCW**

**Reverse Rotation**
Viewed from Shaft End
Port **A** Pressurized - **CCW**
Port **B** Pressurized - **CW**

## MAX. PERMISSIBLE SHAFT SEAL PRESSURE

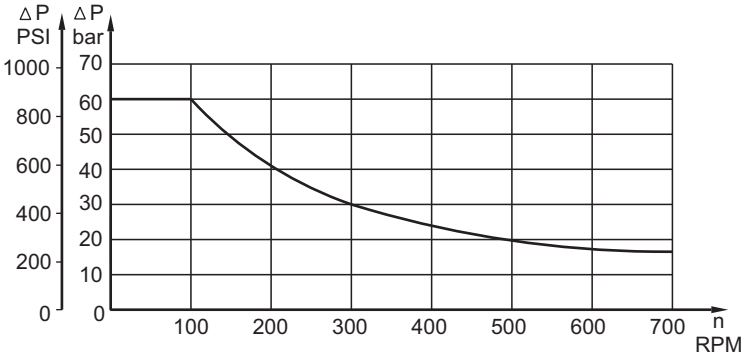


## ORDER CODE

| | 1 | 2 | 3 | 4 |
|---|---|---|---|---|
| **VMF** | | | **HD** | |

**Pos.1 - Displacement code**

| | |
|---|---|
| **315** | - 314,5 cm³/rev [19.18 in³/rev] |
| **400** | - 400,9 cm³/rev [24.45 in³/rev] |
| **500** | - 499,6 cm³/rev [30.48 in³/rev] |
| **630** | - 629,1 cm³/rev [38.38 in³/rev] |
| **800** | - 801,8 cm³/rev [48.91 in³/rev] |

**Pos.2 - Ports**

| | |
|---|---|
| **2** | - side ports, 2xG1, G¼, BSP thread, ISO 228 |
| **4** | - side ports, 2x1 5/16-12 UN, O-ring, 9/16-18 UNF |

**Pos.3 - Special Features**

| | |
|---|---|
| **HD** | - Reinforced motor **HD*** |

For Other **Special Features** see page 69

**Pos.4 - Design Series**

omit - Factory specified

* Drain line should always be used.

The hydraulic motors are mangano-phosphatized as standard.

# MOTOR SPECIAL FEATURES

| Special Feature Description | Order Code | Motor type | | | | | | | |
|---|---|---|---|---|---|---|---|---|---|
| | | MSWM | MTK | MTM | TMF | TMYF | MVM | MVMC | VMF |
| **Speed Sensor*** | RS | O | O | O | O | O | O | – | O |
| **Reinforced motor** | HD | – | S | S | S | S | S | S | S |
| **Low Leakage** | LL | O | O | O | O | O | O | O | O |
| **Low Speed Valving** | LSV | O | O | O | O | O | O | O | O |
| **Free Running** | FR | – | O | – | – | O | – | O | – |
| **Reverse Rotation** | R | O | O | O | O | O | O | O | O |
| **Paint**** | P | O | O | O | O | O | O | O | O |
| **Corrosion Protected Paint**** | PC | O | O | O | O | O | O | O | O |
| **Special Paint***** | **PS** / **PCS** | O | O | O | O | O**** | O | O | O |
| **Check Valves** | | S | O | O | – | O | O | O | – |

| | |
|---|---|
| O | Optional |
| – | Not applicable |
| S | Standard |

* For sensor ordering see pages 70÷71.
** Colour at customer's request.
*** Non painted feeding surfaces, colour at customer's request.
**** For Port Size Version **5** only!

⚠ For more information about **HD** option please contact with "M+S Hydraulic".

# MOTORS WITH SPEED SENSOR

## MSWM...RS

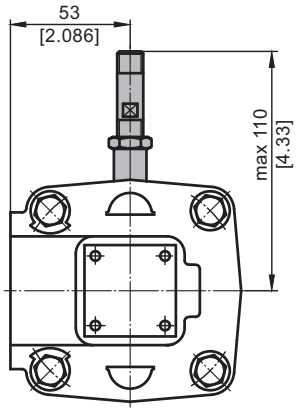


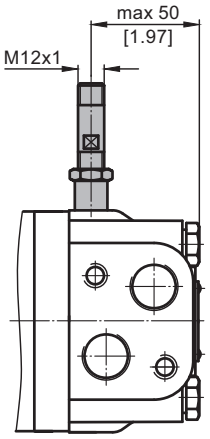


## MTK...RS

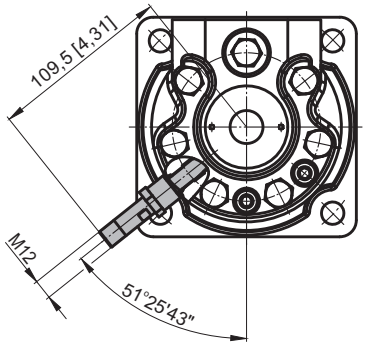


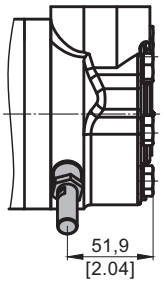


## MTM...RS
## TMF...RS

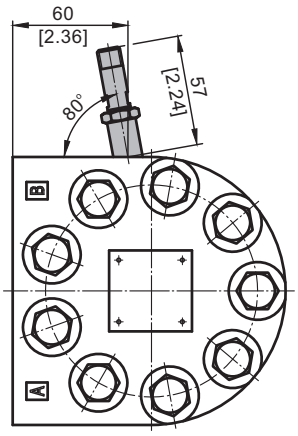


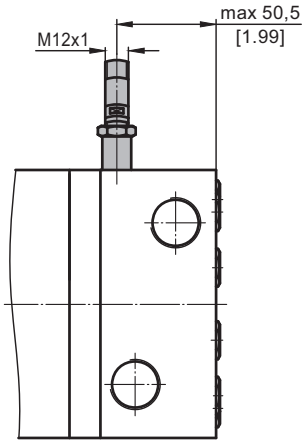


## TMYF...RS

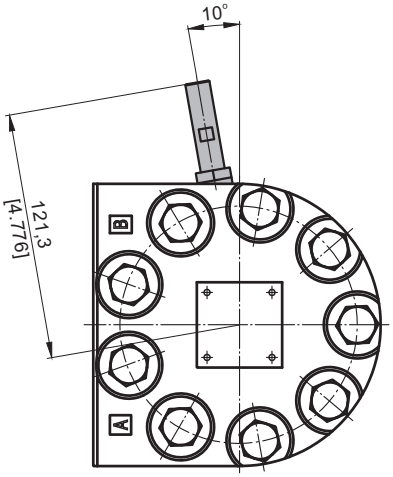


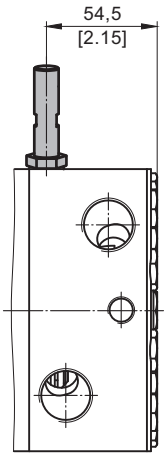


## MVM...RS
## VMF...RS

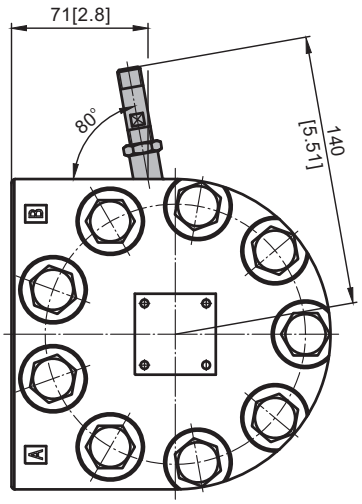


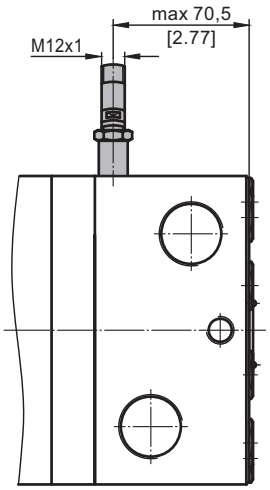


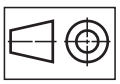

mm [in]

# TECHNICAL DATA OF THE SPEED SENSOR

## Technical data

| | |
|---|---|
| **Frequency range** | 0...15 000 Hz |
| **Output** | Universal PUSH PULL |
| **Power supply** | 10-30 VDC (10-36 for TMYF) |
| **Current input** | <20 mA (@24 VDC) |
| **Maximum output current** | 500 mA |
| **Ambient Temperature** | -40...+125$^0$C [-40...+257$^0$F] |
| **Protection** | IP 67 |
| **Plug connector** | M12-Series |
| **Mounting principle** | ISO 6149 |

## Output signal

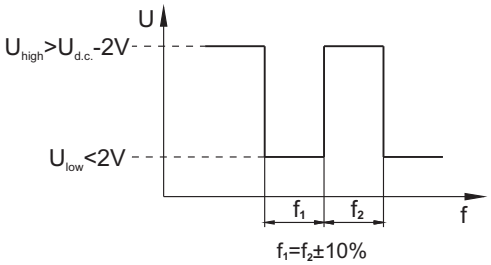


Load max.:$I_{high}$=$I_{low}$<50mA

| Motor type | MSWM MTK | MTM TMF, TMYF | MVM VMF |
|---|---|---|---|
| Pulses per revolution | 54 | 84 | 102 |

## Wiring diagrams

### PNP

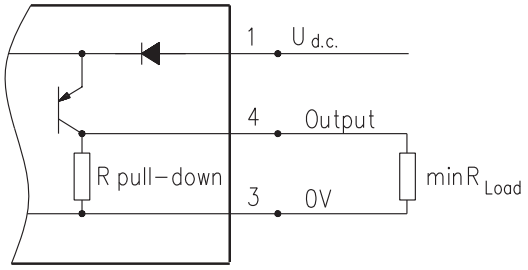


### NPN

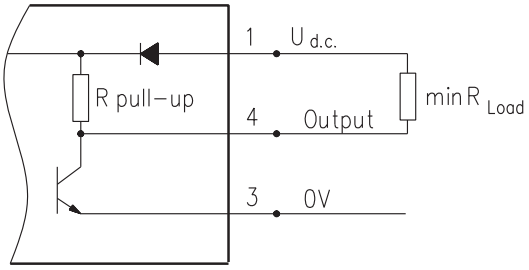


$R_{Load}$ [kΩ]=$U_{d.c.}$ [V]/$I_{max}$ [mA]

## Stick type

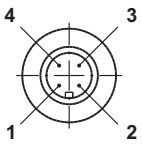


| Terminal No. | Connection | Cable Output |
|---|---|---|
| 1 | $U_{d.c.}$ | Brown |
| 2 | No connection | White |
| 3 | 0V | Blue |
| 4 | Output signal | Black |

## Order Code for Speed Sensor

| Sensor Code | Electric connection |
|---|---|
| **RS** | Connector BINDER 713 series |
| **RSL2,5** | Cable output 3x0,25; 2,5 m [98 in] long |
| **RSL3,5** | Cable output 3x0,25; 3,5 m [138 in] long |
| **RSL5** | Cable output 3x0,25; 5 m [196 in] long |
| **RSL10** | Cable output 3x0,25; 10 m [394 in] long |

**NOTE:** * - The speed sensor is not fitted at the factory, but is supplied in a plastic bag with the motor. For installation see enclosed instructions.

# APPLICATION CALCULATION

## VEHICLE DRIVE CALCULATIONS

**1. Motor speed: n [RPM]**

$$n=\frac{2.65 \times V_{km} \times i}{R_m} \qquad n=\frac{168 \times V_{ml} \times i}{R_{in}}$$

**$v_{km}$** - vehicle speed, km/h;
**$v_{ml}$** - vehicle speed, mil/h;
**$R_m$** - wheel rolling radius, m;
**$R_{in}$** - wheel rolling radius, in;
**i** - gear ratio between motor and wheels. If no gearbox, use i=1.

**2. Rolling resistance: RR, daN [lbs]**

The resistance force resulted in wheels contact with different surfaces:

$$RR=G \times \rho$$

**G** - total weight loaded on vehicle, daN [lbs];
**ρ** - rolling resistance coefficient (Table 1).

Table 1

| Rolling resistance coefficient In case of rubber tire rolling on different surfaces | |
|---|---|
| **Surface** | ρ |
| Concrete- faultless | 0.010 |
| Concrete- good | 0.015 |
| Concrete- bad | 0.020 |
| Asphalt- faultless | 0.012 |
| Asphalt- good | 0.017 |
| Asphalt- bad | 0.022 |
| Macadam- faultless | 0.015 |
| Macadam- good | 0.022 |
| Macadam- bad | 0.037 |
| Snow- 5 cm | 0.025 |
| Snow- 10 cm | 0.037 |
| Polluted covering- smooth | 0.025 |
| Polluted covering- sandy | 0.040 |
| Mud | 0.037÷0.150 |
| Sand- Gravel | 0.060÷0.150 |
| Sand- loose | 0.160÷0.300 |

**3. Grade resistance: GR, daN [lbs]**

$$GR=G \times (\sin\alpha + \rho \times \cos\alpha)$$

**α** - gradient negotiation angle (Table 2).

Table 2

| Grade % | α Degrees | Grade % | α Degrees |
|---|---|---|---|
| 1% | 0º 35' | 12% | 6º 5' |
| 2% | 1º 9' | 15% | 8º 31' |
| 5% | 2º 51' | 20% | 11º 19' |
| 6% | 3º 26' | 25% | 14º 3' |
| 8% | 4º 35' | 32% | 18º |
| 10% | 5º 43' | 60% | 31º |

**4. Accelerarion force: FA, daN [lbs]**

Force **FA** necessary for acceleration from 0 to maximum speed **v** and time **t** can be calculated with a formula:

$$FA=\frac{V_{km} \times G}{36 \times t}, \text{[daN]} \qquad FA=\frac{V_{ml} \times G}{22 \times t}, \text{[lbs]}$$

**FA** - acceleration force, daN [lbs];
**t** - time, [s]

**5. Tractive effort: DP, daN [lbs]**

Tractive effort **DP** is the additional force of trailer. This value will be established as follows:
- acc. to constructor's assessment;
- as calculating forces in items 2, 3 and 4 of trailer; the calculated sum corresponds to the tractive effort requested.

**6. Total tractive effort: TE, daN [lbs]**

Total tractive effort **TE** is total effort necessary for vehicle motion; that the sum of forces calculated in items from 2 to 5 and increased with 10% because of air resistance.

$$TE=1,1 \times (RR + GR + FA + DP)$$

**RR** - force acquired to overcome the rolling resistance;
**GR** - force acquired to slope upwards;
**FA** - force acquired to accelerate (acceleration force);
**DP** - additional tractive effort (trailer).

**7. Motor Torque moment: M, daNm [lb-in]**

Necessary torque moment for every hydraulic motor:

$$M=\frac{TE \times R_m [R_{in}]}{N \times i \times \eta_M}$$

**N** - motor numbers;
**$\eta_M$** - mechanical gear efficiency (if it is available).

**8. Cohesion between tire and road covering: $M_W$, daNm [lb-in]**

Necessary torque moment for every hydraulic motor:

$$M_W=\frac{G_W \times f \times R_m [R_{in}]}{i \times \eta_M}$$

To avoid wheel slipping, the following condition should be observed $M_W>M$

**f** - frictional factor;
**$G_W$** - total weight over the wheels, daN [lbs].

Table 3

| Surface | Frictional factor f |
|---|---|
| Steel on steel | 0.15 ÷ 0.20 |
| Rubber tire on polluted surface | 0.5 ÷ 0.7 |
| Rubber tire on asphalt | 0.8 ÷ 1.0 |
| Rubber tire on concrete | 0.8 ÷ 1.0 |
| Rubber tire on grass | 0.4 |

**9. Radial motor loading: $P_{rad}$, daN [lbs]**

When motor is used for vehicle motion with wheels mounted directly on motor shaft, the total radial loading of motor shaft Prad is a sum of motion force and weight force acting on one wheel.

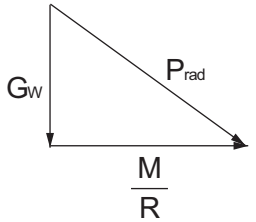


$$P_{rad}=\sqrt{G_w^2+\left(\frac{M}{R}\right)^2}$$

**$G_w$** - weight held by wheel;
**$P_{rad}$** - total radial loading of motor shaft;
**M/R** - motion force.

In accordance with calculated loadings the suitable motor from the catalogue is selected.

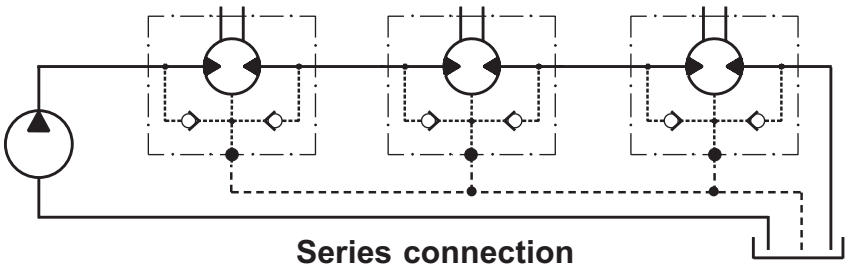

**Series connection**

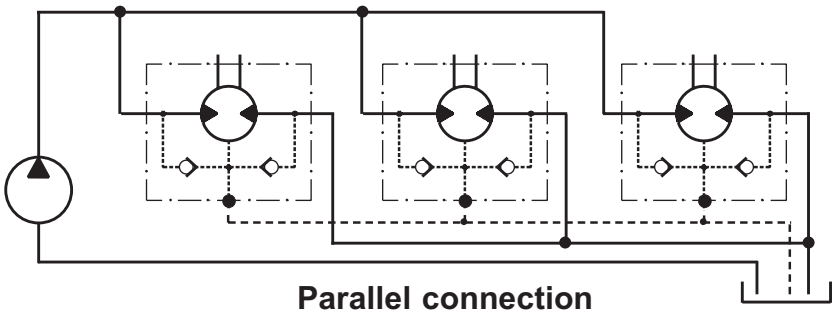

**Parallel connection**

# WARRANTY

M+S Hydraulic warrants, that its products, supplied directly to original equipment manufacturer, authorized distributor or other customer, will be free of defects in material or workmanship at the time of shipment from M+S Hydraulic and will conform to the products technical documentation (drawings and specifications) under sale agreement with Buyer.

This warranty will apply only to defects appearing within applicable Warranty period, mentioned below. If Buyer notifies M+S Hydraulic within the Warranty period about any such defects, M+S, at its sole option will replace or repair the defective products or their parts found by M+S Hydraulic to be defective in material or workmanship.

THE FOREGOING LIMITED WARRANTY IS AVAILABLE ONLY IF “M+S HYDRAULIC” IS PROMPTLY NOTIFIED IN WRITTEN OF THE ALLEGED DEFECT AND DOES NOT COVER FAILURE TO FUNCTION CAUSED BY DAMAGE TO THE PRODUCT, IMPROPER INSTALLATION, UNREASONABLE USE OR ABUSE OF THE PRODUCT, FAILURE TO PROVIDE OR USE OF IMPROPER MAINTENANCE OR USUAL, DEGRADATION OF THE PRODUCT DUE TO PHYSICAL ENVIRONMENTS OF AN USUAL NATURE. THE FOREGOING REMEDIES ARE THE SOLE AND EXCLUSIVE REMEDIES AVAILABLE TO CUSTOMER. To facilitate the inspection, M+S Hydraulic may require return of the product/part, which Buyer claims to be defective.

M+S Hydraulic shall not be liable for labor costs or any other expenses incurred during the disassembling or reinstalling of the product/part.

In case the claimed products are returned to M+S Hydraulic in bad condition: dirty, disassembled, with damaged or missing parts during transportation, the warranty will be considered as not applicable and the products will not be liable to repair.

**Warranty periods**

**New products:** The Warranty period is limited to 24 consecutive months (2 years) from the date of production of the product.

**Repaired products:** If the product is repaired in M+S Hydraulic during its warranty period, the warranty period of the repaired item shall continue for the balance of original Warranty period or for a period equal to 50% of the original new product Warranty period, whichever is later.

**Spare parts:** The Warranty period for Spare parts is 12 consecutive months (1 year) from the dispatch date of such parts from M+S Hydraulic.

LIMITATION OF LIABILITY M+S Hydraulic's liability for claim of any kind, for loss or damage arising out of, connected with or resulting from an order, or from the performance or branch thereof, or from the design, manufacture, sale delivery, operation or use of any of its products shall be limited to, at M+S 's sole option, replacement, repair of any defective product or the issuance of a credit to Customer against any future purchases. Cash refunds will not be made under any circumstances and Customer will not be entitled to recover any damages of any kind against M+S Hydraulic, including but not limited to incidental or consequential damages, whether direct or indirect, known or unknown, foreseen or unforeseen.

M+S HYDRAULIC

68, Kozloduy St., 6100 Kazanlak, Bulgaria
Tel.: ++359 431 65167
++359 431 64271
Fax: +359 431 64114
E-Mail: msh@ms-hydraulic.com
URL: http://www.ms-hydraulic.com