TÜVRheinland® CERT ISO 9001

M+S HYDRAULIC

HYDRAULIC BRAKES MOTOR-BRAKES & VALVE BLOCKS

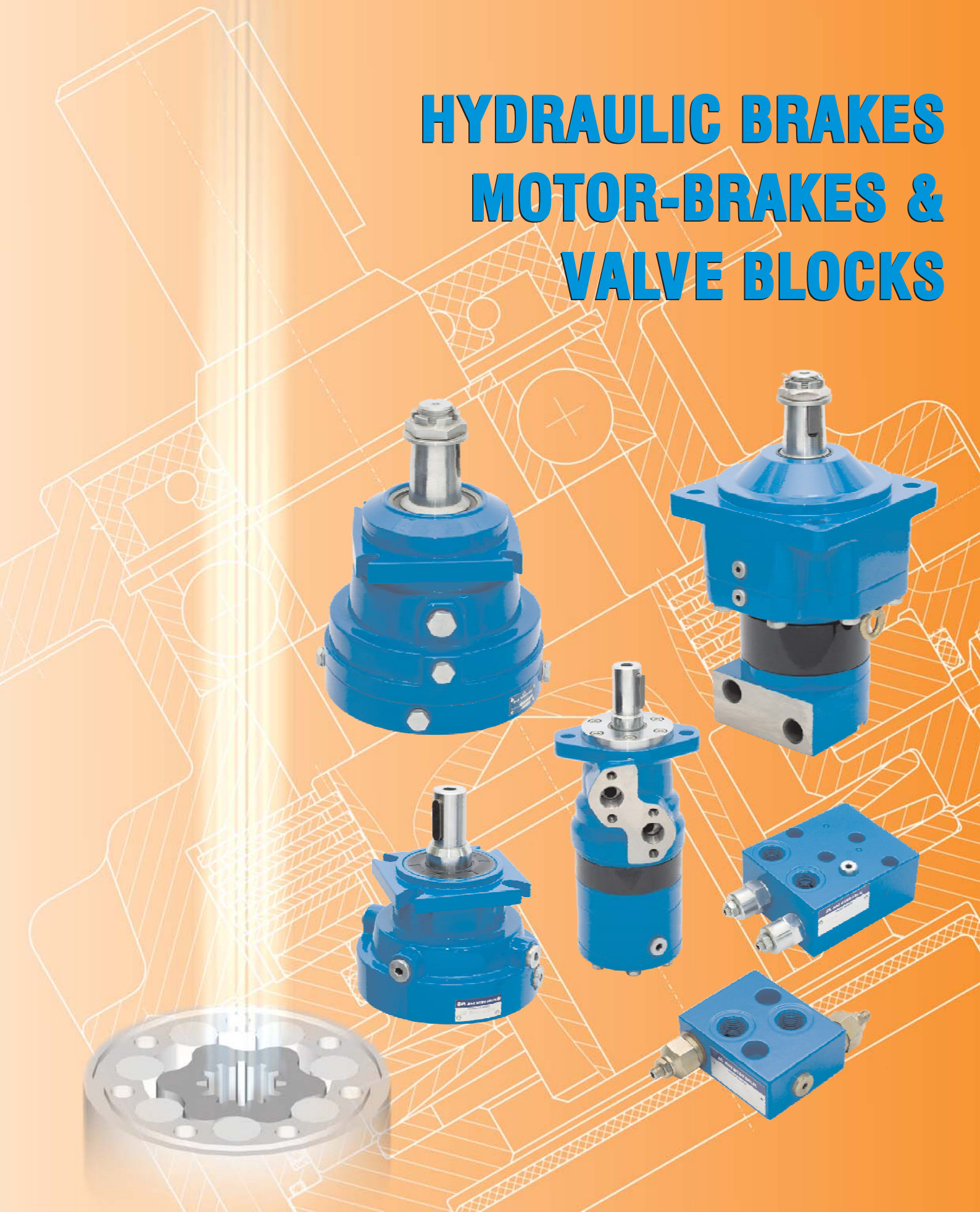

ACCESSORIES and MOTOR-BRAKES

CONTENTS

Page

- Hydraulic Disc Brake for MP, MR and MS type LB/288 3
- Hydraulic Disc Brake for MSS type LBS/289(290) and for MSV type LBV/289(290) 6
- Hydraulic Disc Brake for MTS type LBS/314(315) and for MTV type LBV/314(315) 10
- Hydraulic Disc Brake for MVS type LBS/313 and type LBS/316 14
- Hydraulic Disc Brake type B...R 18
- Hydraulic Disc Brake type B...T 19
- Hydraulic Disc Brake type B-130K 20
- Hydraulic Motor-brakes type B/MR 21
- Hydraulic Motor-brakes type BD/MR 26
- Hydraulic Motor-brakes type MT/B 31
- Hydraulic Motor-brakes type MT/BX 35
- Hydraulic Motor-brakes type MTM/B 39
- Hydraulic Motor-brakes type SW 45
- Hydraulic Motor-brakes type TW 48
- Overcenter Valves with Brake Control 51
- Switch Valves 59
- Crossover Relief Valves 61
- Motor-Brakes Special Features 72
- Application Calculations 73

“M+S HYDRAULIC” can accept no responsibility for possible errors in catalogues, brochures and other printed material.
“M+S HYDRAULIC” reserves the right to alter its products without notice. This also applies to products already on order provided that such alterations can be made without subsequential changes being necessary in specifications already agreed.

HYDRAULIC DISC BRAKES LB, LBS, LBV- Wet

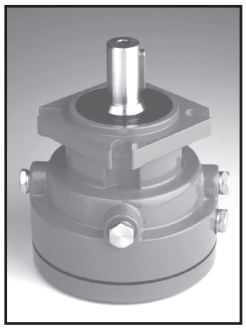

APPLICATION

» Heavy Duty machinery
» Wheel drives
» Material handling
» Mining
» Agricultural machines
» Conveyors
» Door openers and swing drives etc.

GENERAL

Fluid type	Mineral based- HLP(DIN 51524) or HM(ISO 6743/4)
Temperature range, °C [°F]	-40÷140 [-40÷284]
Viscosity range, mm^2/s	20÷75 [98÷347]
Filtration	ISO code 20/16 (nominal filtration of 25 microns)
Maintenance	Changed after the first 50-100 h, then after every 500-1500 h.

CONTENTS

Hydraulic Disc Brake for MP, MR and MS Motors type LB/288 ..... 4÷5
Hydraulic Disc Brake for MSS and MSV type LBS(V)/289 6
Hydraulic Disc Brake for MSS and MSV type LBS(V)/290 7
Output Shafts for LBS(LBV)/289, 290 8
Specification data for LBS(LBV)/289, 290 8
Internal Spline data for .../289,290 and .../314,315.....8
Load curve for LBS(LBV)/289, 290 9
Order code for LB/288,LBS(LBV)/289, 290 9
Hydraulic Disc Brake for MTS and MTV type LBS(LBV)/314 10
Hydraulic Disc Brake for MTS and MTV type LBS(LBV)/315 11
Specification data for LBS(LBV)/314, 315 12
Load curve for LBS(LBV)/314, 315 12
Output Shafts for LBS(LBV)/314, 315 13
Order code for LBS(LBV)/314, 315 13
Hydraulic Disc Brake for MVS type LBS/313 14
Load curve for LBS/313 14
Hydraulic Disc Brake for MVS type LBS/316 15
Load curve for LBS/316 15
Specification data for LBS/313, 316.....16
Output Shafts for LBS/313, 316 16
Internal Spline data for LBS/313, 316 17
Order code for LBS/313, 316 17

LB, LBS

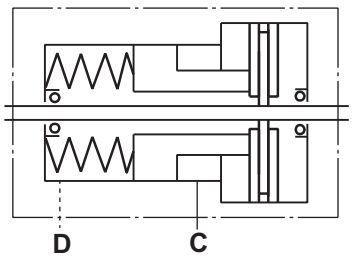

LBV

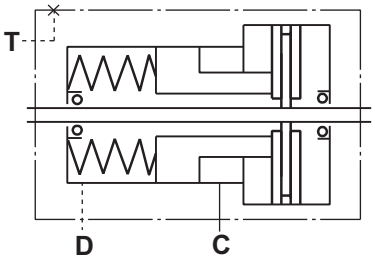

HYDRAULIC DISC BRAKE for FLANGE ATTACHMENT to MP, MR and MS HYDRAULIC MOTORS

TYPE LB/288

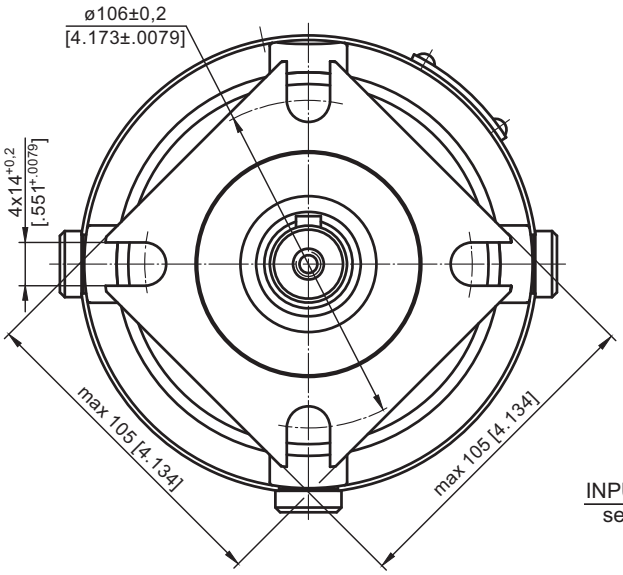

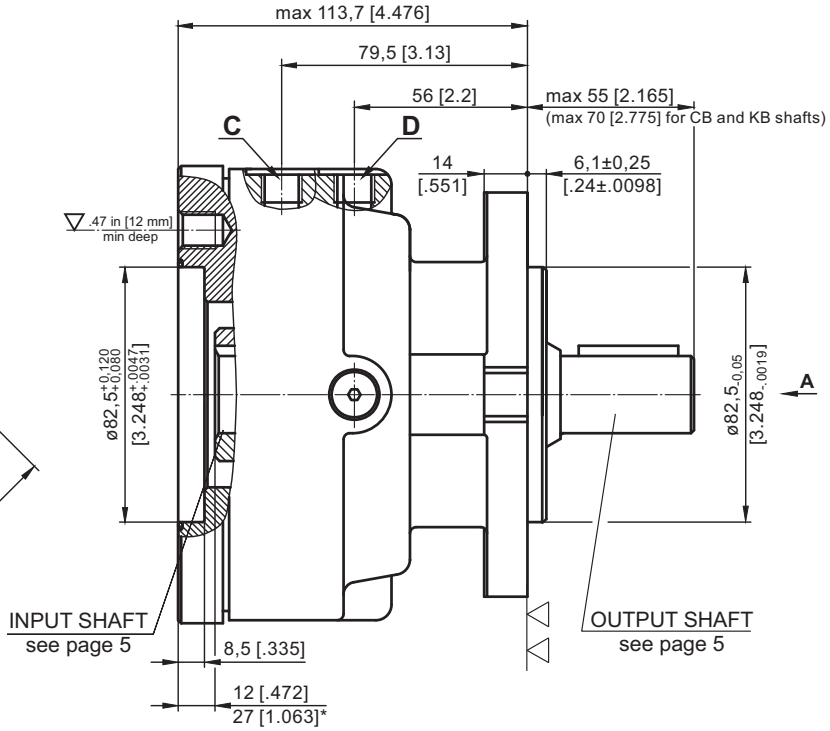

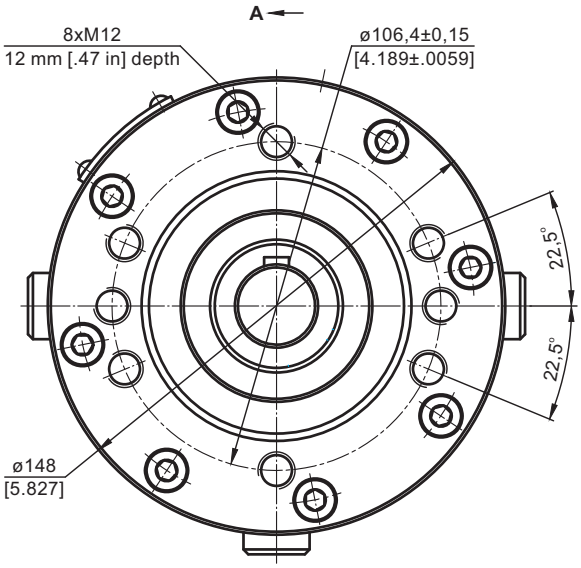

▽- Place for attachment (tightening torque for screw M12-12.9 - $7^{+0,5}$ daNm [620^{+44} lb-in])

▽▽- Place for attachment

C: Brake release Port - G¼, 9 mm [.35 in] depth

D: Drainage tap - G¼, 9 mm [.35 in] depth

* - For Input Shaft Hole Versions **SH** and **SB**.

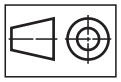

mm [in]

LOAD CURVE

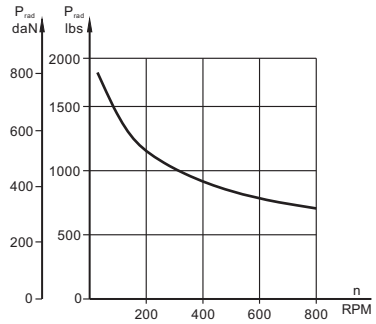

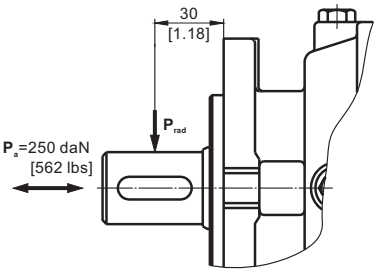

SPECIFICATION DATA

Description **LB/288...**		7	14	21	32	43	63
*Min. Static Torque, daNm [lb-in]		6-8 [531-708]	13-15 [1150-1327]	20-22 [1770-1947]	31-34 [2743-3009]	41-45 [3628-3982]	61-64 [5399-5665]
Opening Pressure, bar [PSI]	min	4-5 [58-73]	8-9 [116-130]	12-13 [174-188]	18-20 [260-290]	24-26 [348-377]	38-39 [550-565]
	max	300 [4350]					
Min. oil quantity for brake releasing, cm^3 [in^3]		7 - 8 [.427 - .488]					
Oil volume, cm^3 [in^3]		50 - 120 [3.5 - 7.35]					
Max. Pressure in drain space, bar [PSI]		0,5 [7.25]					
Weight, kg [lb]		9 [19.8]					

*Static torque is obtained at working pressure - 0 bar [0 PSI].

INPUT SHAFT HOLES

C

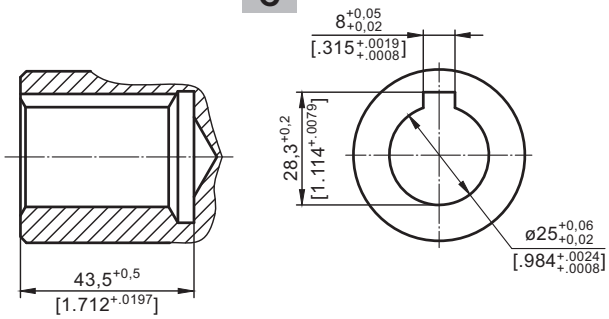

CO

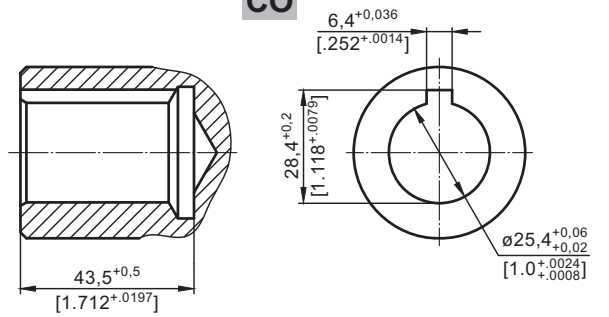

SH

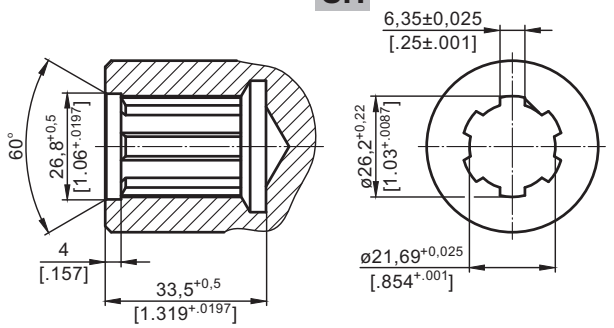

SB

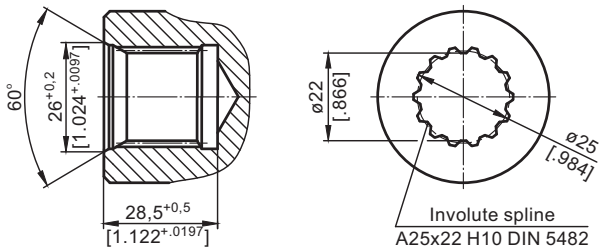

CB

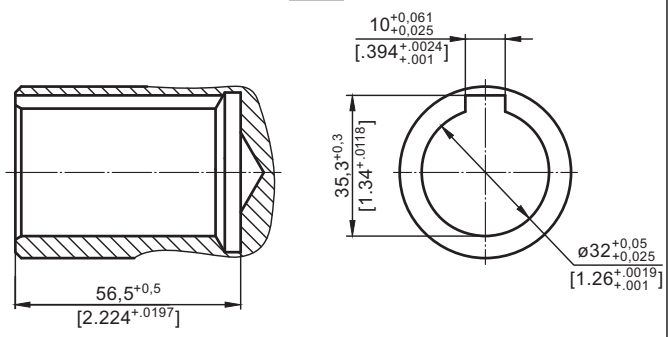

OUTPUT SHAFT EXTENSIONS

C - ø25 straight, Parallel key A8x7x30 DIN 6885
Max. Torque 34 daNm [3010 lb-in]

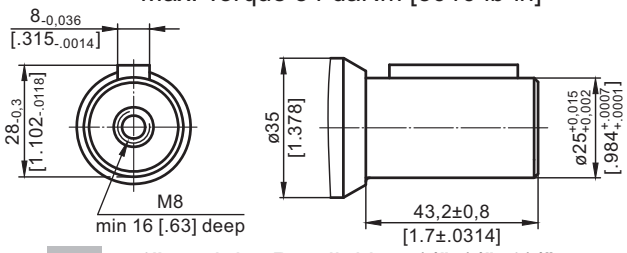

CO - ø1" straight, Parallel key ¼"x¼"x1¼" BS46
Max. Torque 34 daNm [3010 lb-in]

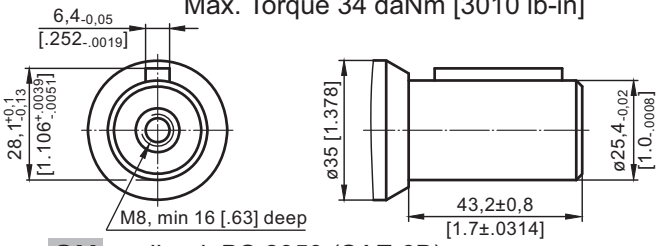

SH - splined, BS 2059 (SAE 6B)
Max. Torque 40 daNm [3540 lb-in]

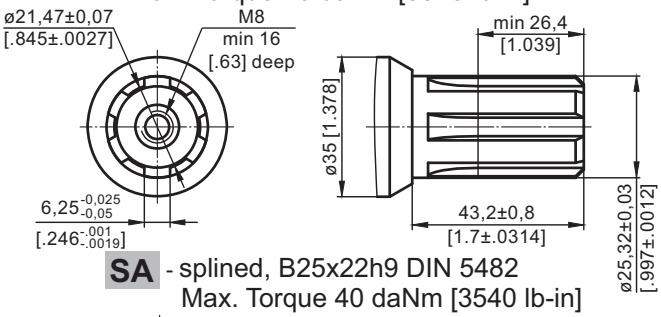

SA - splined, B25x22h9 DIN 5482
Max. Torque 40 daNm [3540 lb-in]

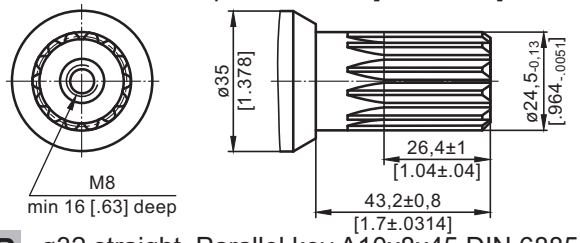

CB - ø32 straight, Parallel key A10x8x45 DIN 6885
Max. Torque 77 daNm [6815 lb-in]

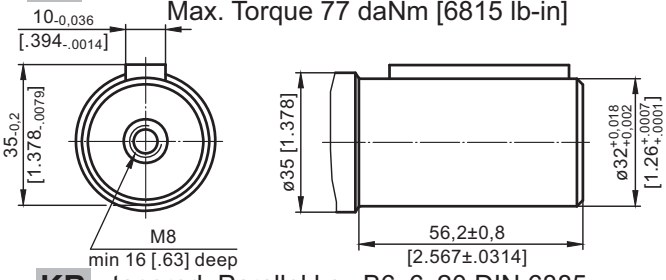

KB - tapered, Parallel key B6x6x20 DIN 6885
Max. Torque 95 daNm [8400 lb-in]

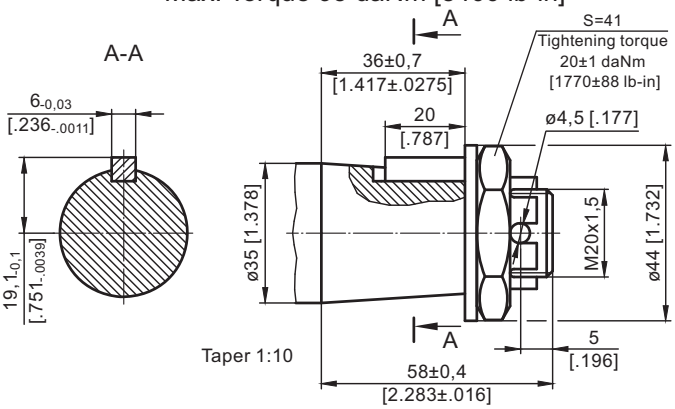

mm [in]

HYDRAULIC DISC BRAKE for FLANGE ATTACHMENT to MSS and MSV HYDRAULIC MOTORS

TYPE LBS/289

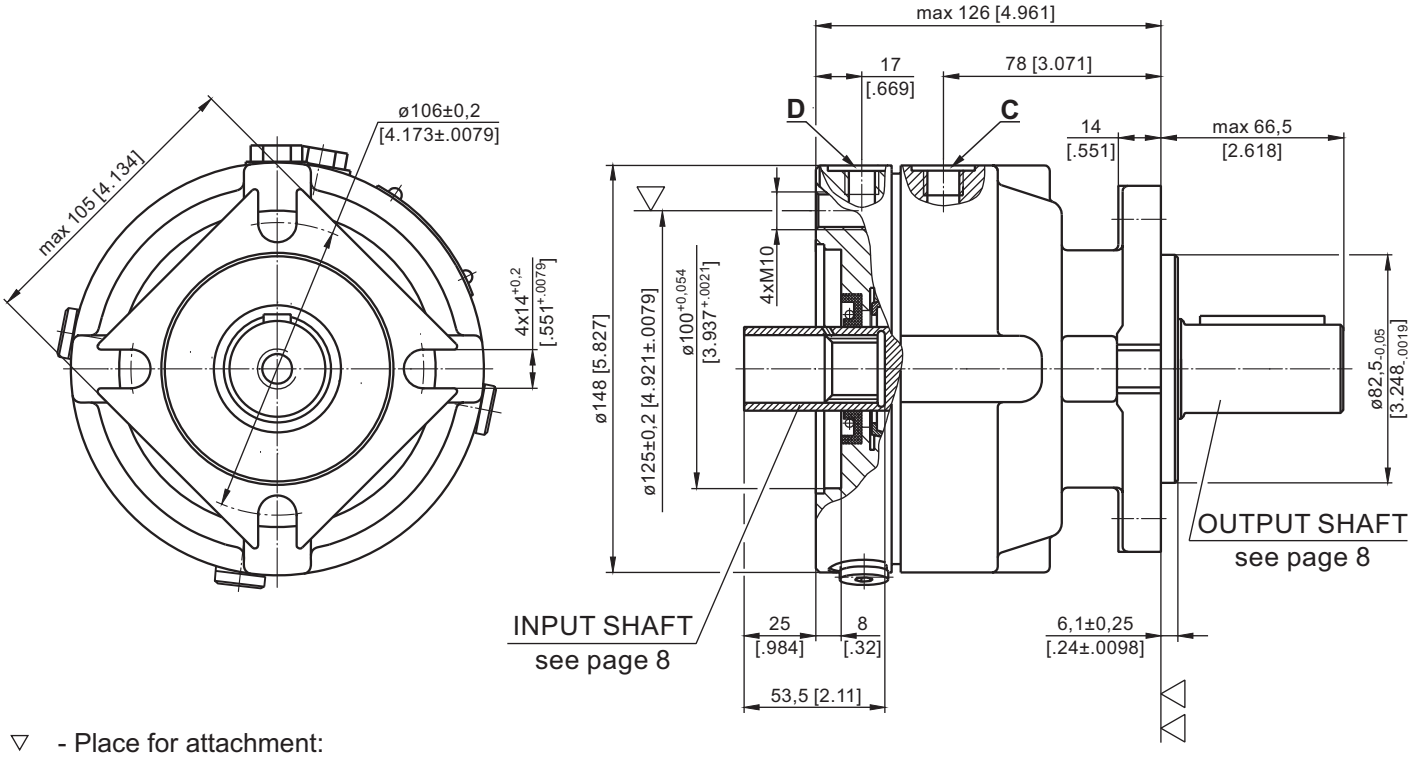

▽ - Place for attachment:
LBS - tightening torque for screw M10x35 - 12.9 DIN 912 - 6,5$^{+0,5}$ daNm [575^{+44} lb-in]
LBV - tightening torque for screw M10xL - 12.9 DIN 931 - 6,5$^{+0,5}$ daNm [575^{+44} lb-in]

▽▽ - Place for attachment

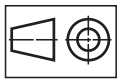
mm [in]

C: Brake release Port - G¼, 9 mm [.35 in] depth
D: Drain plug for the Brake - G¼, 9 mm [.35 in] depth
T: Drain plug for the Motor - G¼, 9 mm [.35 in] depth

TYPE LBV/289

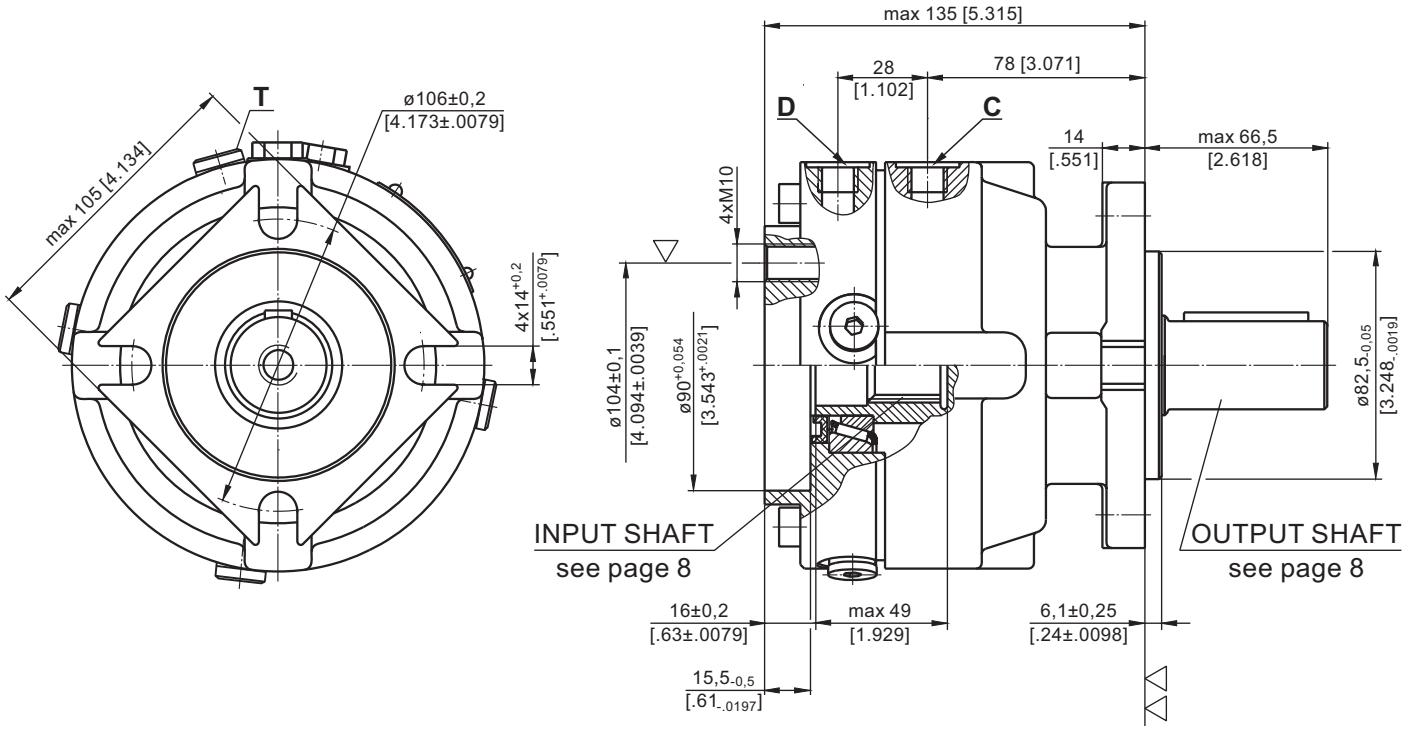

HYDRAULIC DISC BRAKE for FLANGE ATTACHMENT to MSS and MSV HYDRAULIC MOTORS

TYPE LBS/290

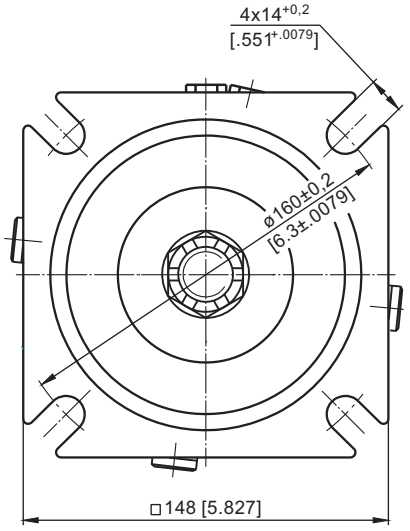

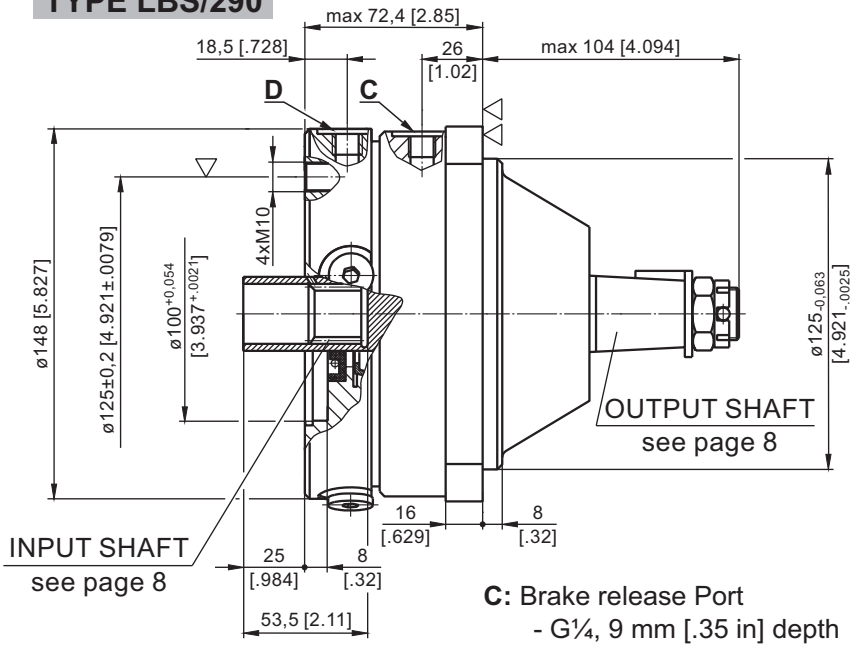

▽ - Place for attachment
LBS - tightening torque for screw M10x35 - 12.9 DIN 912 - 6,5+5 daNm [575+44 lb-in]
LBV - tightening torque for screw M10xL - 12.9 DIN 931 - 6,5+5 daNm [575+44 lb-in]
▽▽ - Place for attachment

C: Brake release Port
- G¼, 9 mm [.35 in] depth

D: Drain plug for the Brake
- G¼, 9 mm [.35 in] depth

T: Drain plug for the Motor
- G¼, 9 mm [.35 in] depth

TYPE LBV/290

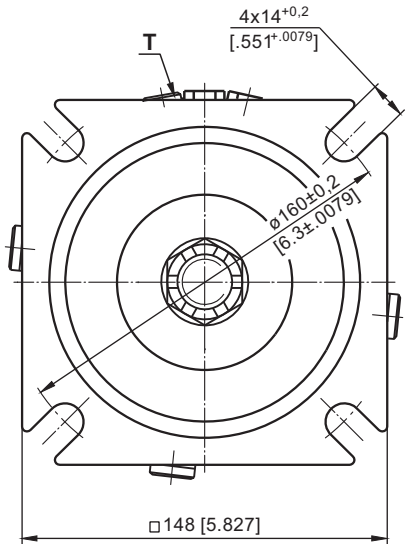

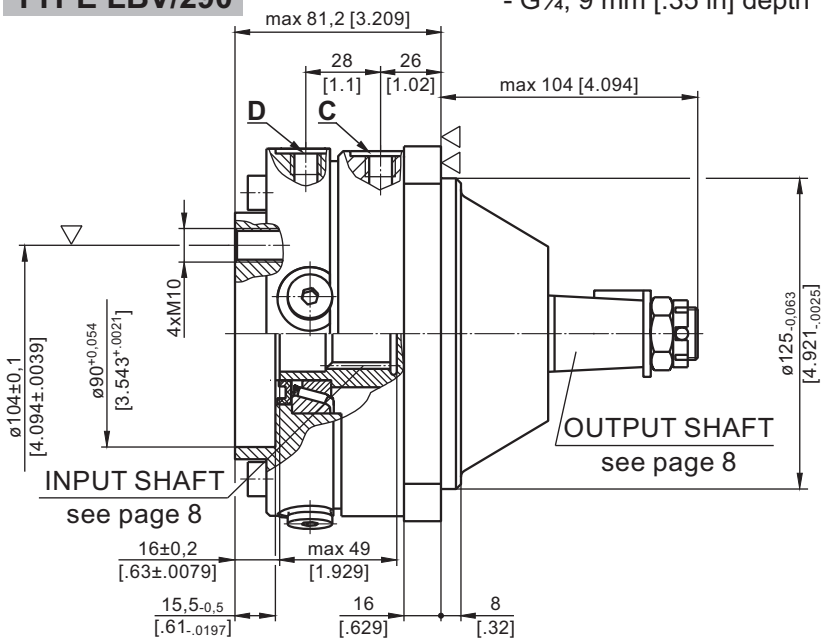

INPUT FACE For Versions 289 and 290

TYPE LBS/289(290)

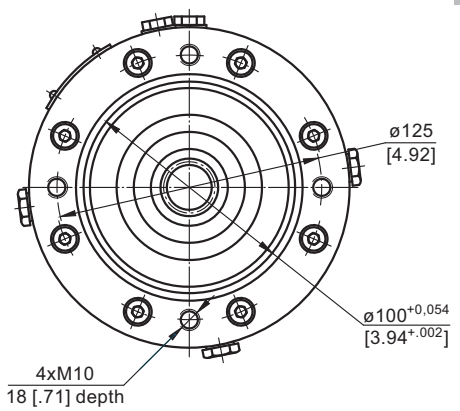

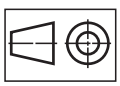

mm [in]

TYPE LBV/289(290)

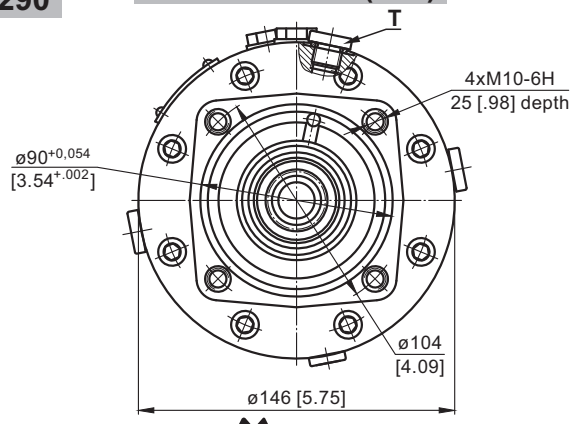

OUTPUT SHAFT EXTENSIONS

CB - ø32 straight, Parallel key A10x8x45 DIN 6885
Max. Torque 77 daNm [6815 lb-in]

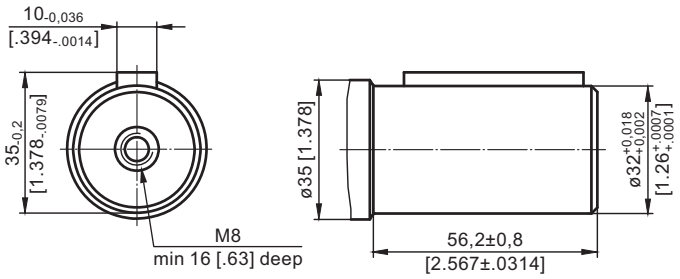

KB - tapered 1:10, Parallel key B6x6x20 DIN 6885
Max. Torque 95 daNm [8400 lb-in]

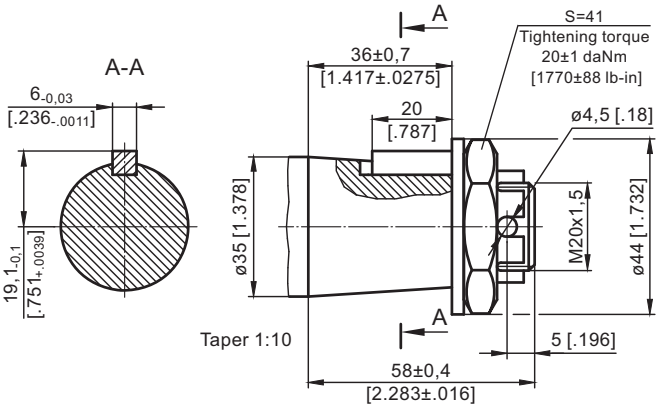

SH - ø1¼" splined 14T, DP12/24 ANS B92.1-1970
Max. Torque 95 daNm [8400 lb-in]

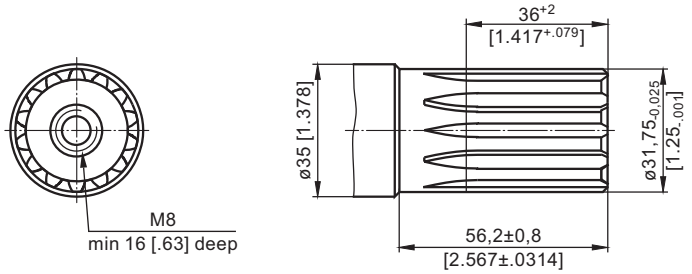

mm [in]

SPECIFICATION DATA

Description LBS/289(290) LBV/289(290)		21	32	43	63	L43	L63
*Min. Static Torque, daNm [lb-in]		20-22 [1770-1947]	31-34 [2743-3009]	41-45 [3628-3982]	61-64 [5399-5665]	41-45 [3628-3982]	61-64 [5399-5665]
Opening Pressure, bar [PSI]	min	12-13 [174-188]	18-20 [260-290]	24-26 [348-377]	37-39 [540-565]	20-22 [290-320]	21-23 [305-333]
	max	300 [4350]					
Min. oil quantity for brake releasing	cm^3 [in^3]	7 - 8 [.427 - .488]					
Oil volume	cm^3 [in^3]	50 - 120 [3.05 - 7.35]					
Max. Pressure in drain space	bar [PSI]	5 [72]					
Weight	kg [lb]	9 [19.8]					

* Static torque is obtained at working pressure - 0 bar [0 PSI].

INTERNAL SPLINE DATA for the ATTACHED COMPONENT

Fillet Root Side Fit		LBS(V)/289 LBS(V)/290		LBS(V)/314 LBS(V)/315	
		mm	inch	mm	inch
Number of Teeth	z	12	12	16	16
Diametral Pitch	DP	12/24	12/24	12/24	12/24
Pressure Angle		30°	30°	30°	30°
Pitch Dia.	D	25,4	1	33,8656	1.3333
Major Dia.	Dri	28,0-0,1	1.1 ÷ 1.098	38,4+0,4	1.5118÷1.5275
Minor Dia.	Di	23,0+0,033	.907 ÷ .905	32,15+0,06	1.2657÷1.2673
Space Width [Circular]	Lo	4,308±0,020	.1704 ÷ .1688	4,516±0,037	.1763÷.1791
Fillet Radius	R	0,2	.008	0,5	.02
Max. Measurement between Pins	L	17,62 +0,15	.699 ÷ .694	26,9+0,10	1.063÷1.059
Pin Dia.	d	4,835±0,001	.19039÷.19031	4,835±0,001	.19026÷.19034
Corrected	x.m	+0,8	+.031	+1,0	+.039

Standard ANS B92.1-1970, class 5 [m=2.1166]

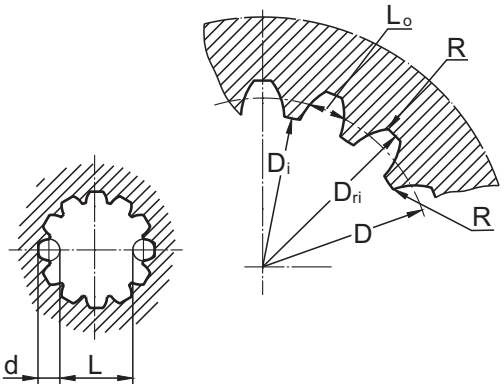

LOAD CURVE

The curve applies to a B10 bearing life of 3000 hours at 200 RPM
1: Pa<350 daN [787 lbs]
2: Pa=500 daN [1125 lbs]

LBS(V)/289

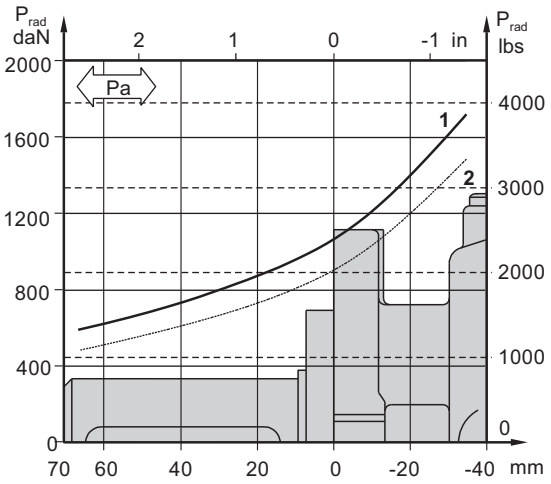

LBS(V)/290

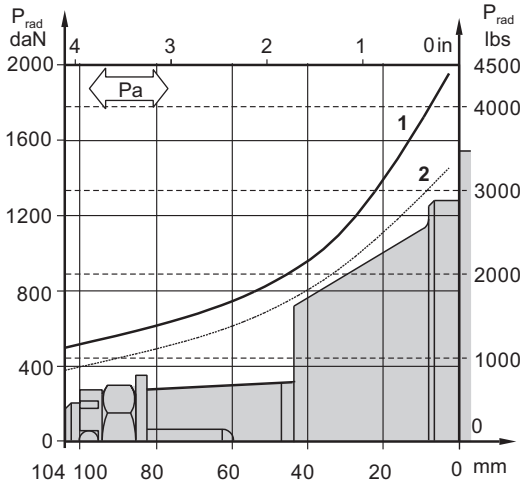

ORDER CODE - LB/288

	1		2	3	4	5
LB/288		-				

Pos.1 - Input Shaft Hole
C, CO, SH, CB, SB

Pos.2 - Static Torque code (See Specification data)
7, 14, 21, 32, 43, 63

Pos.3 - Output Shaft Extensions**

C	- ø25 straight, Parallel key A8x7x32 DIN6885
CO	- ø1" straight, Parallel key ¼"x¼"x1¼" BS46
SH	- ø25,32 splined BS 2059 (SAE 6B)
SA	- ø24,5 splined B25x22 DIN 5482
CB	- ø32 straight, Parallel key A10x8x45 DIN6885
KB	- ø35 tapered 1:10, Parallel key B6x6x20 DIN6885

Pos.4 - Option (Paint)***

omit	- no Paint
P	- Painted
PC	- Corrosion Protected Paint

Pos.5 - Design Series
omit - Factory specified

ORDER CODE - LBS, LBV

	1		2		3	4	5	6
LB		/		-				

Pos.1 - Type

S	- Disc Brake for short motor S - MSS
V	- Disc Brake for very short motor V - MSV

Pos.2 - Design code

289	- for MSS and MSV motors
290	- for MSS and MSV motors (Wheel Mount)

Pos.3 - Static Torque code (See Specification data)
21, 32, 43, 63, L43, L63

Pos.4 - Output Shaft Extensions*

CB	- ø32 straight, Parallel key A10x8x45 DIN6885
KB	- ø35 tapered 1:10, Parallel key A6x6x20 DIN6885
SH	- ø1¼" splined 14T ANS B92.1-1970

Pos.5 - Option (Paint)**

omit	- no Paint
P	- Painted
PC	- Corrosion Protected Paint

Pos.6 - Design Series
omit - Factory specified

NOTES:
* The permissible output torque for shafts must not be exceeded!
For Max. Torque values see data on pages 5 and 8.
** The color is by customer's request.

The Disc Brakes are mangano-phosphatized as standard.

ATTENTION:
1. Hydraulic brake is delivered without oil (it is lubricated only).
2. Hydraulic brake is filled through the drain port **D**. Space is filled with 50 ÷ 120 cm^3 [3.05 ÷ 7.32 in^3] mineral oil HLP (DIN 51524) or HM (ISO 6743/4). For LB/288 fill oil after hydraulic motor assembly.
3. In all brakes, friction discs and separators should be lubricated.

HYDRAULIC DISC BRAKES for FLANGE ATTACHMENT to MTS and MTV HYDRAULIC MOTORS

TYPE LBS/314

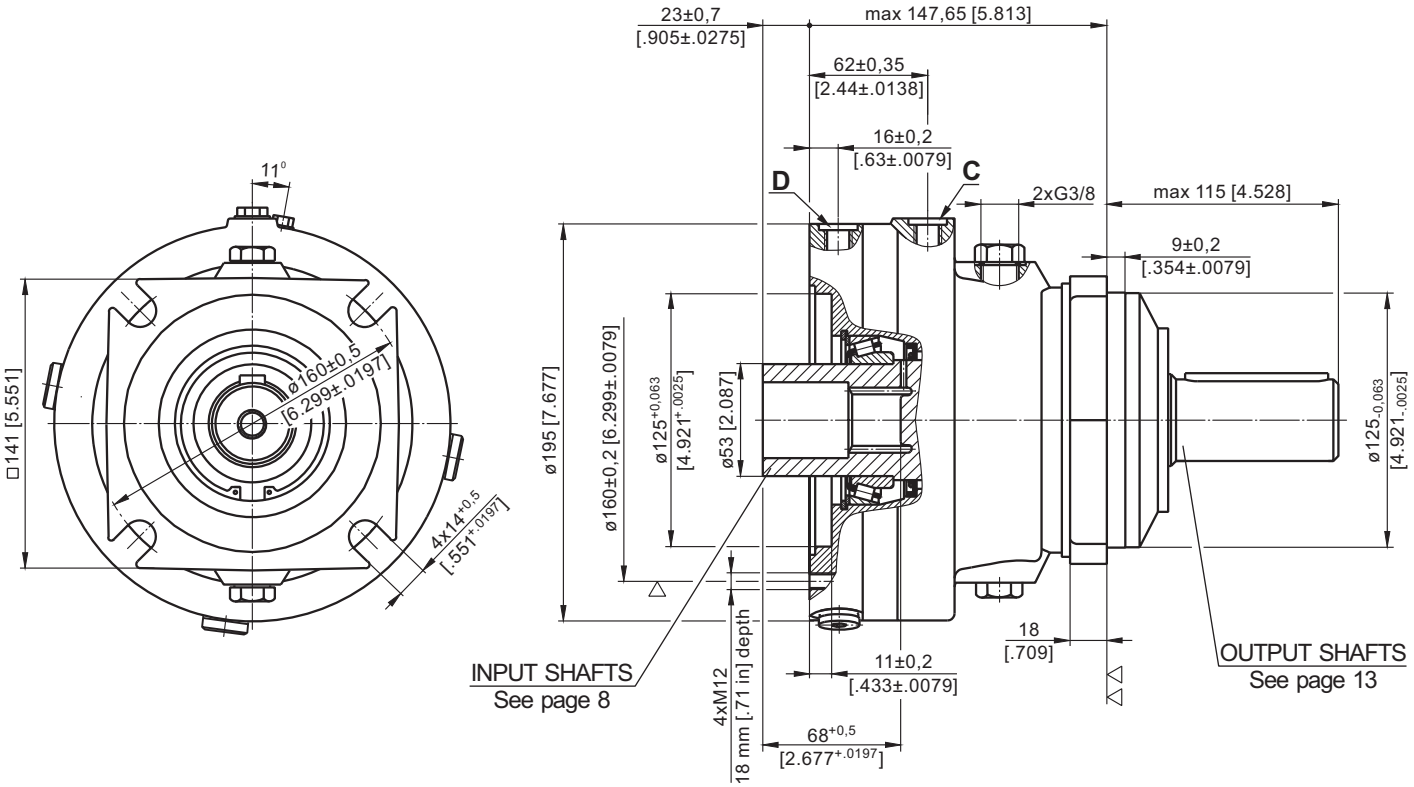

▽ - Place for attachment
(tightening torque for screw M12x30 - 12.9 DIN 912, $10^{+0,5}$ daNm [885^{+44} lb-in])

▽▽- Place for attachment

C: Brake release Port - G¼, 12 mm [.47 in] depth
D: Drainage tap - G¼, 12 mm [.47 in] depth

TYPE LBV/314

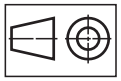

mm [in]

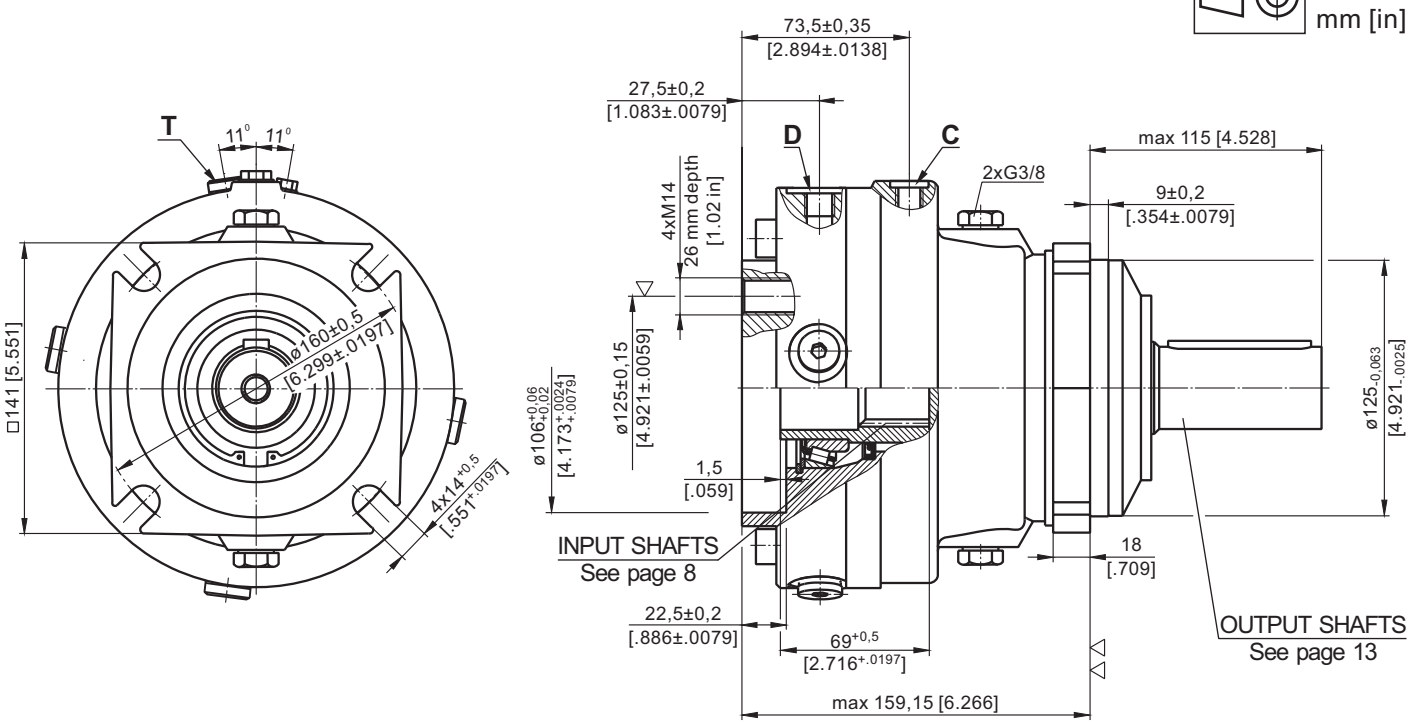

▽- Place for attachment
(tightening torque for screw M14xL - 12.9 DIN 912, $13^{+0,5}$ da Nm [1150^{+44} lb-in])

▽▽- Place for attachment

C: Brake release Port - G¼, 9 mm [.35 in] depth
D: Drain plug for the Brake - G¼, 9 mm [.35 in] depth
T: Drain plug for the Motor - G¼, 9 mm [.35 in] depth

HYDRAULIC DISC BRAKES for FLANGE ATTACHMENT to MTS and MTV HYDRAULIC MOTORS

TYPE LBS/315

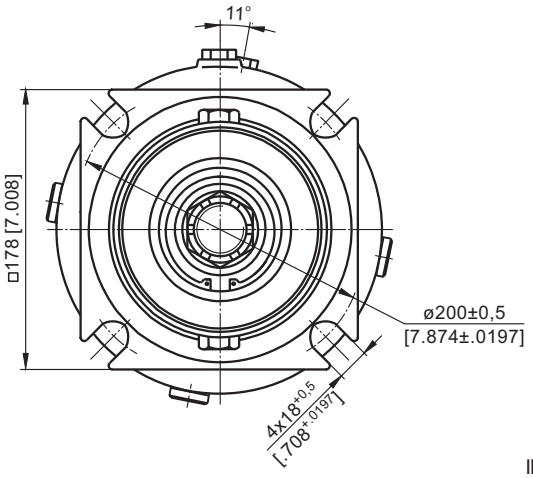

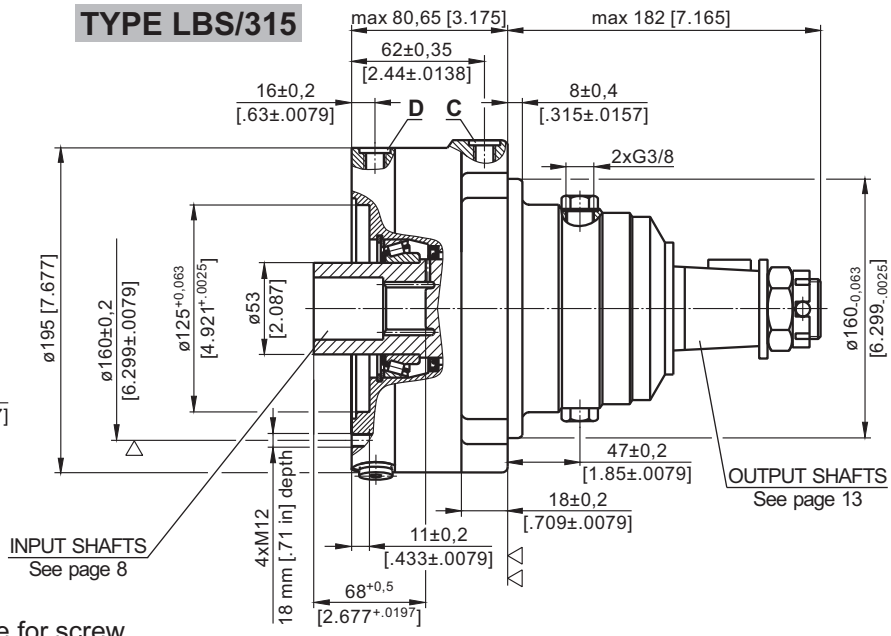

▽ - Place for attachment (tightening torque for screw M12x30 - 12.9 DIN 912, $10^{+0,5}$ daNm [885^{+44} lb-in])

▽▽- Place for attachment

C: Brake release Port - G¼, 12 mm [.47 in] depth

D: Drainage tap - G¼, 12 mm [.47 in] depth

TYPE LBV/315

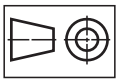

in [mm]

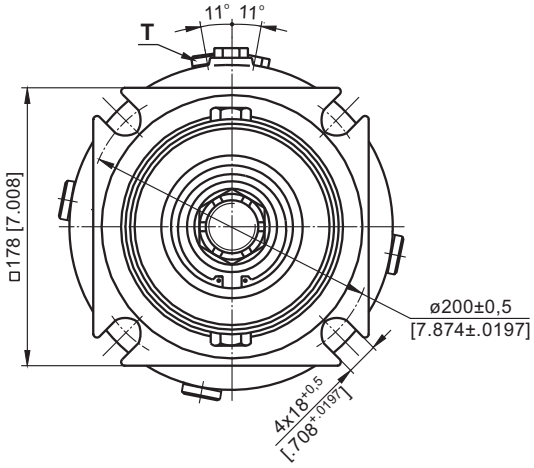

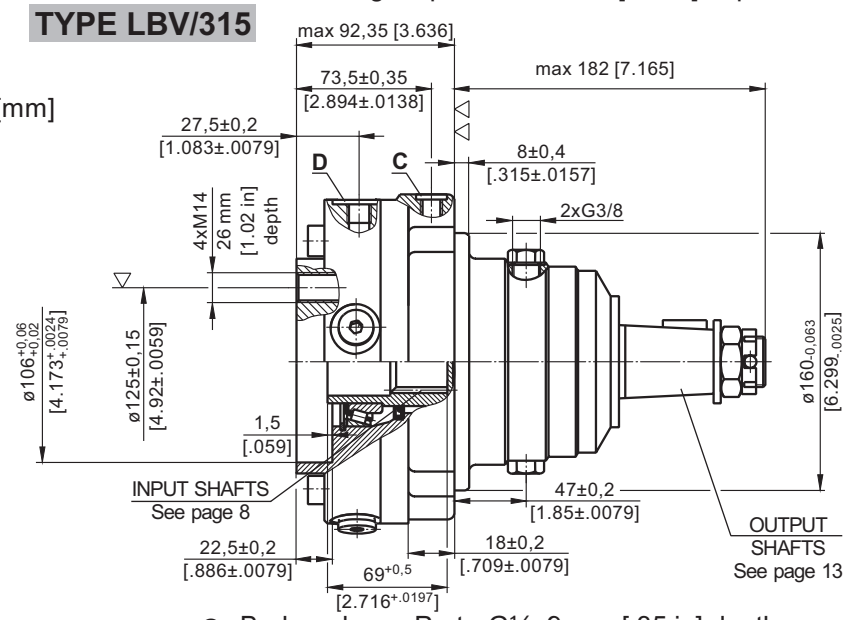

▽- Place for attachment (tightening torque for screw M14xL - 12.9 DIN 912, $13^{+0,5}$ da Nm [1150^{+44} lb-in])

▽▽- Place for attachment

C : Brake release Port - G¼, 9 mm [.35 in] depth

D : Drain plug for the Brake - G¼, 9 mm [.35 in] depth

T : Drain plug for the Motor - G¼, 9 mm [.35 in] depth

INPUT FACE For Versions 314 and 315

TYPE LBS/314 (315)

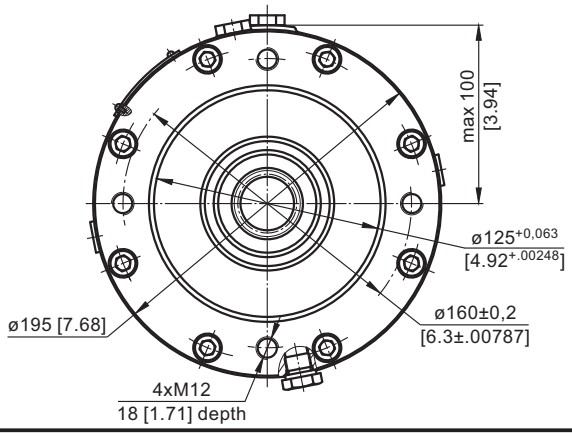

TYPE LBV/314 (315)

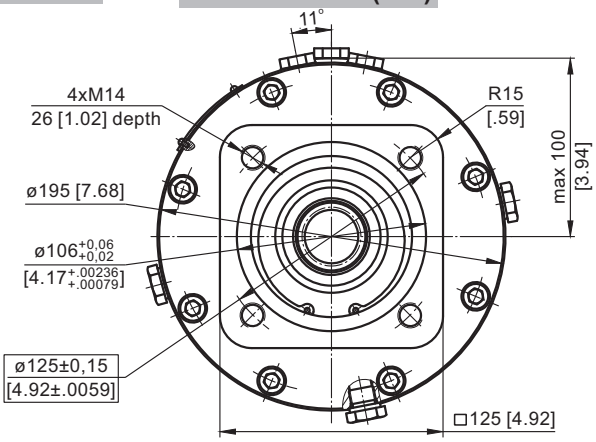

SPECIFICATION DATA

Description LBS/314,315			21	29	43	65	85	110	130
*Min. Static Torque,	daNm [lb-in]		18-23 [1593-2036]	28-33 [2478-2921]	42-46 [3717-4071]	61-70 [5399-6196]	83-92 [7346-8143]	108-118 [9559-10444]	126-136 [11152-12037]
Opening Pressure,	bar [PSI]	min**	4-5 [58-72]	6-7 [87-101]	9-10 [130-145]	13-15 [188-217]	18-20 [261-290]	23-25 [333-362]	27-29 [391-420]
		max	300 [4350]						
Min. oil quantity for brake releasing,	cm³ [in³]		8-9 [.488-.549]						
Oil volume,	cm³ [in³]		250						
Max. Pressure in drain space,	bar [PSI]		5 [72]						
Weight for .../314 .../315	kg [lb]		24 [52.9] 25 [55.1]						

* Static torque is obtained at working pressure - 0 bar.

** The indicated value is a difference between the inlet pressure for driving of the brake and the drain pressure. Brakes must always have a drain line.

LOAD CURVE

The output shaft runs in tapered bearings that permit high axial and radial forces. The permissible radial load on the shaft is shown for an axial load of 0 N as function of the distance from the mounting flange to the point of load application. The curves apply to a B10 bearing life of 2000 hours at 100 RPM.

LBS(V) ... /314

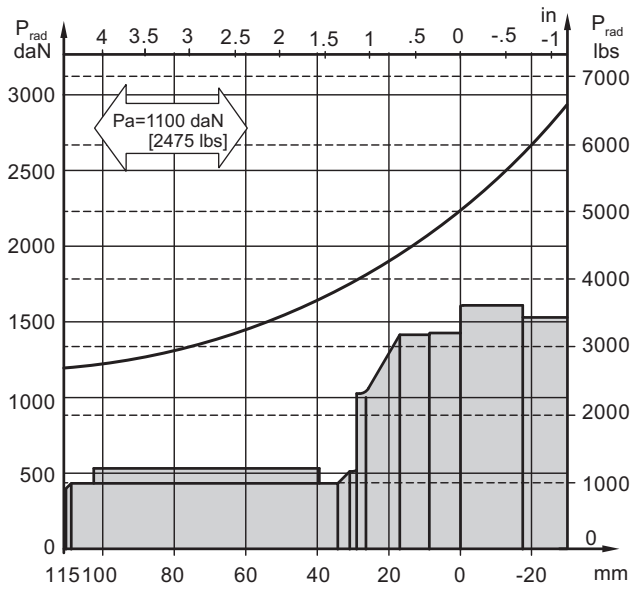

LBS(V) ... /315

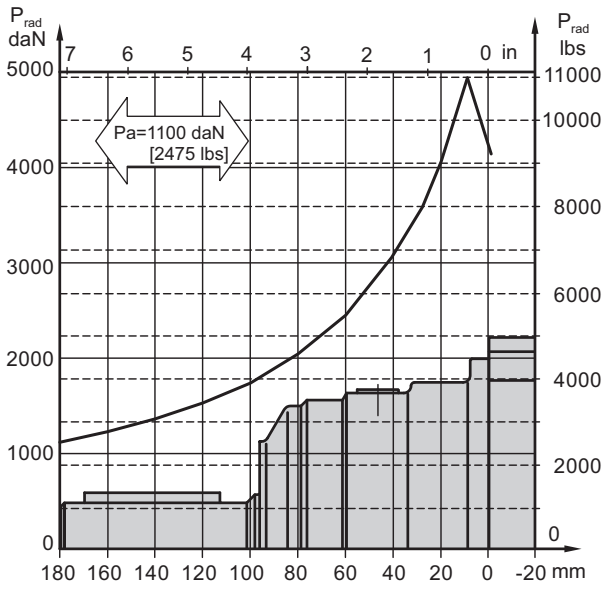

OUTPUT SHAFT EXTENSIONS

C - ø40 straight, Parallel key A12x8x70 DIN 6885
Max. Torque 132,8 daNm [11755 lb-in]

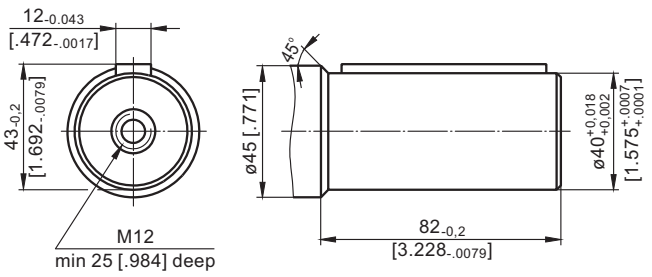

K - tapered 1:10, Parallel key B12x8x28 DIN 6885
Max. Torque 210,7 daNm [18650 lb-in]

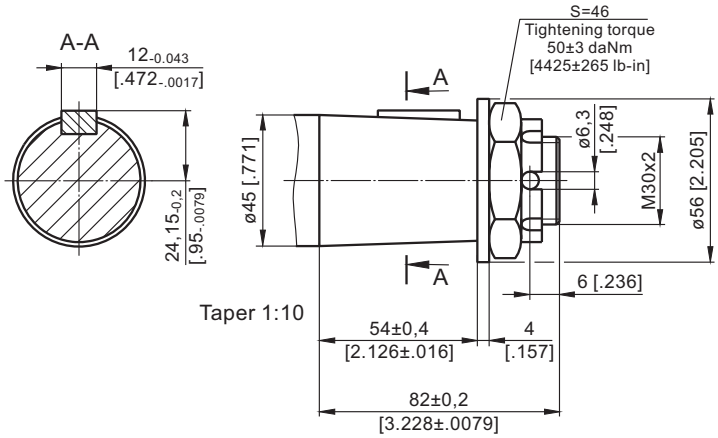

CO - ø1½" straight, Parallel key ⅜"x⅜"x 2¼" BS46
Max. Torque 132,8 daNm [11755 lb-in]

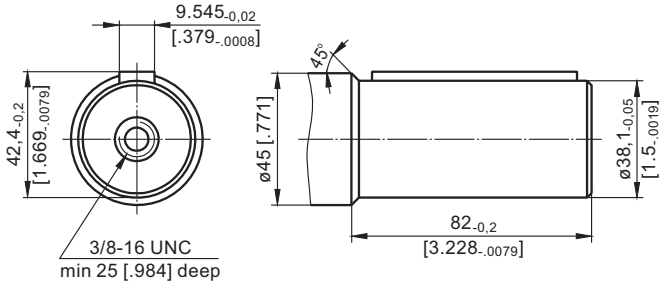

SH - ø1½" splined 17T, DP 12/24 ANSI B92.1-1976
Max. Torque 132,8 daNm [11755 lb-in]

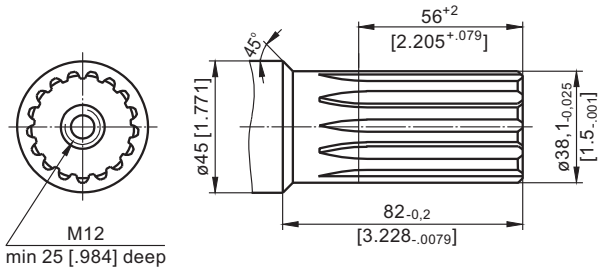

mm [in]

ORDER CODE

	1		2		3	4	5	6
L B		**/**		**-**				

Pos.1 - Type

S	- Disc Brake for short motor **S** - MTS
V	- Disc Brake for very short motor **V** - MTV

Pos.2 - Design code

314	- for MTS and MTV motors
315	- for MTS and MTV motors (Wheel Mount)

Pos.3 - Static Torque code (see Specification data)

21, 29, 43, 65, 85, 110, 130

Pos.4 - Output Shaft Extensions*

C	- ø40 straight, Parallel key A12x8x70 DIN6885
CO	- ø1½" straight, Parallel key ⅜"x⅜"x2¼" BS46
SH	- ø1½" splined 17T, ANSI B 92.1-1976
K	- ø45 tapered 1:10, Parallel key B12x8x28 DIN6885

Pos.5 - Option (Paint)**

omit	- no Paint
P	- Painted
PC	- Corrosion Protected Paint

Pos.6 - Design Series

omit	- Factory specified

NOTES:
* The permissible output torque for shafts must not be exceeded!
** The color is by customer's request.

The Disc Brakes are mangano-phosphatized as standard.

ATTENTION:
1. Hydraulic brake is delivered without oil (it is lubricated only).
2. Fill the brake through the drain port **D** with 50 ÷ 120 cm^3 [3.05 ÷ 7.32 in^3] mineral oil HLP (DIN 51524) or HM (ISO 6743/4). LB/288 must be filled after the motor is assembled on the brake.
3. In all brakes, friction discs and separators should be lubricated.

HYDRAULIC DISC BRAKES for FLANGE ATTACHMENT to MVS HYDRAULIC MOTORS

Type LBS/313

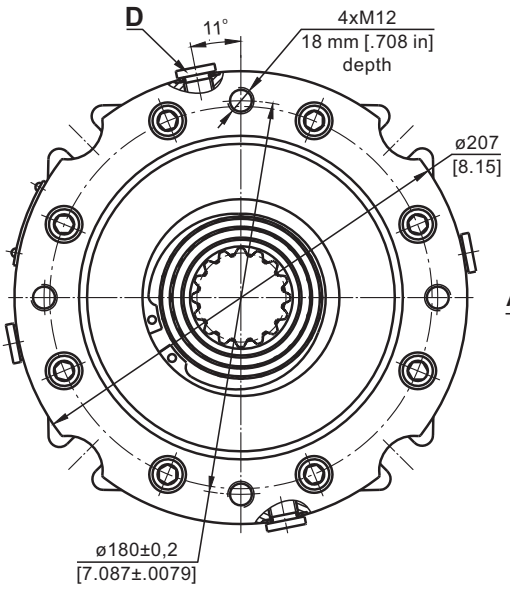

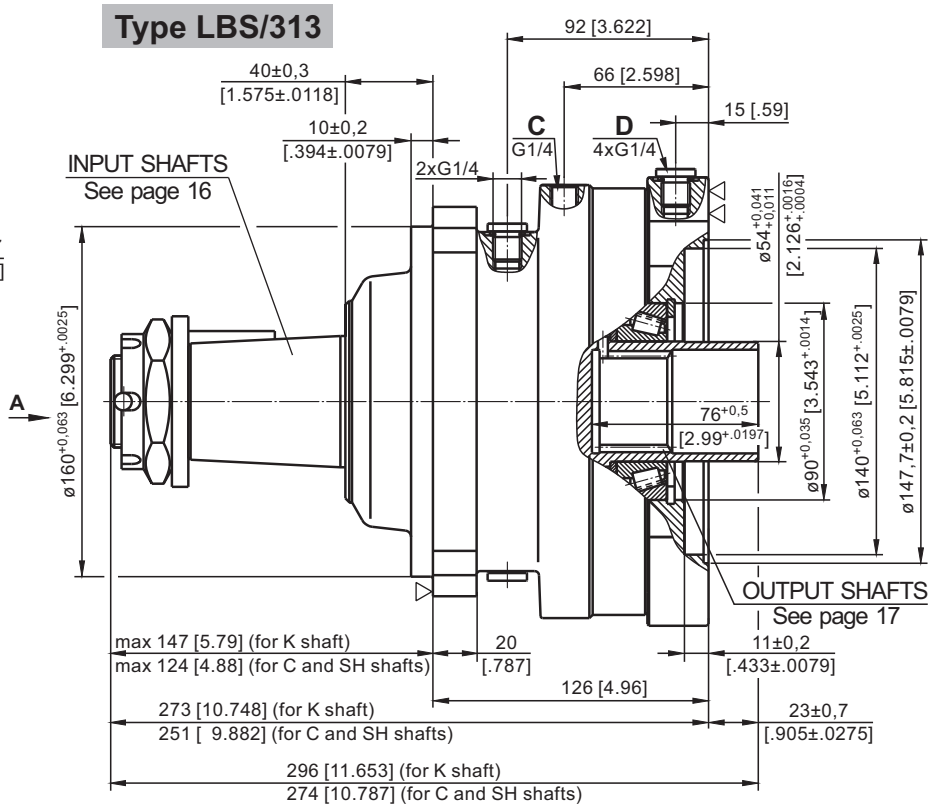

C: Brake release Port - G¼, 12 mm [.47 in] depth

D: Drainage tap - G¼, 12 mm [.47 in] depth

▽ - Place for attachment

▽▽ - Place for attachment
(tightening torque for screw M12x35 - 12.9 DIN 912, $10^{+0,5}$ daNm [885^{+44} lb-in])

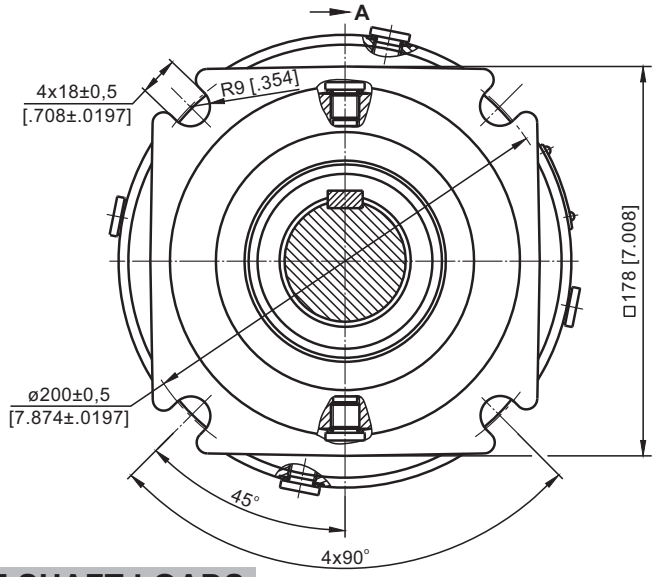

mm [in]

PERMISSIBLE SHAFT LOADS

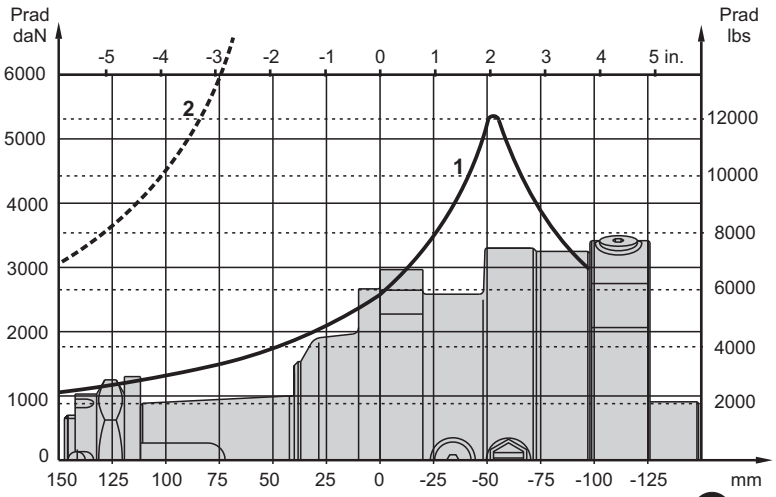

1 - Bearing curve: The curve applies to a B10 bearing life of 3000 hours at 200 RPM.

2 - Shaft curve: The curve represents Max. permissible radial shaft load with safety factor 3:1.

HYDRAULIC DISC BRAKES for FLANGE ATTACHMENT to MVS HYDRAULIC MOTORS

Type LBS/316

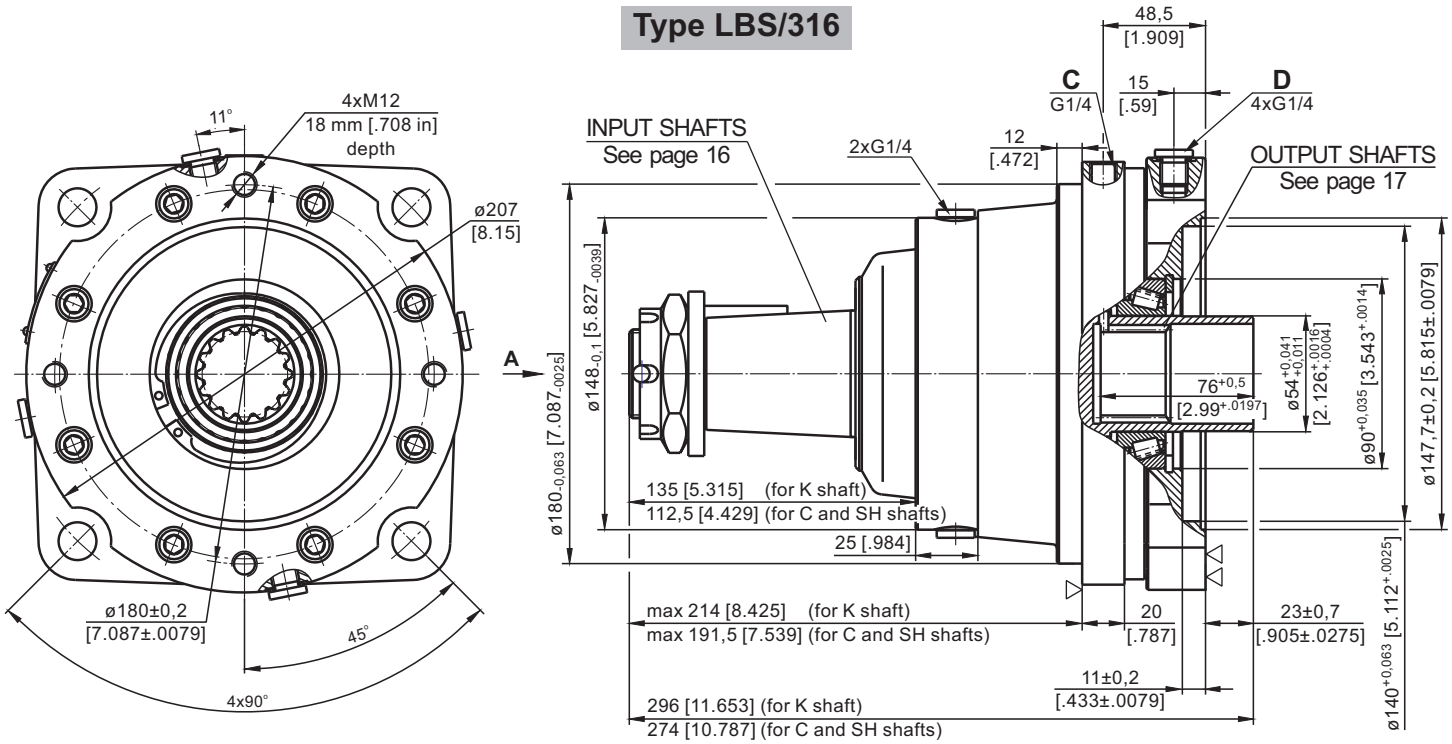

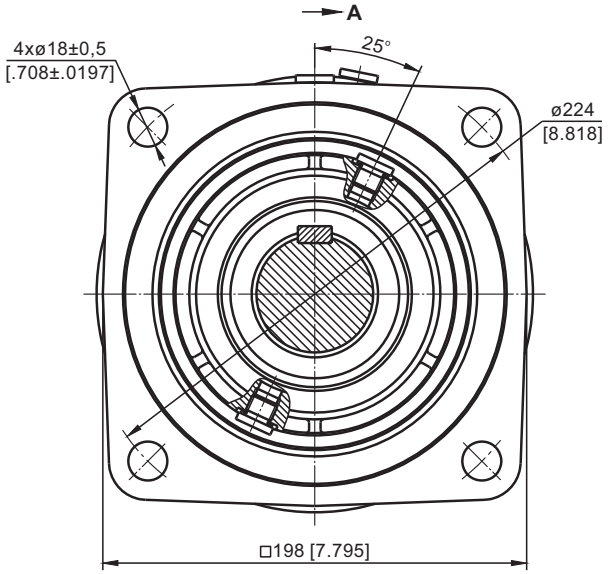

C: Brake release Port - G¼, 12 mm [.47 in] depth

D: Drainage tap - G¼, 12 mm [.47 in] depth

▽ - Place for attachment

▽▽ - Place for attachment
(tightening torque for screw M12x35 - 12.9 DIN 912, $10^{+0,5}$ daNm [885^{+44} lb-in])

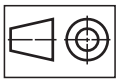
mm [in]

PERMISSIBLE SHAFT LOADS

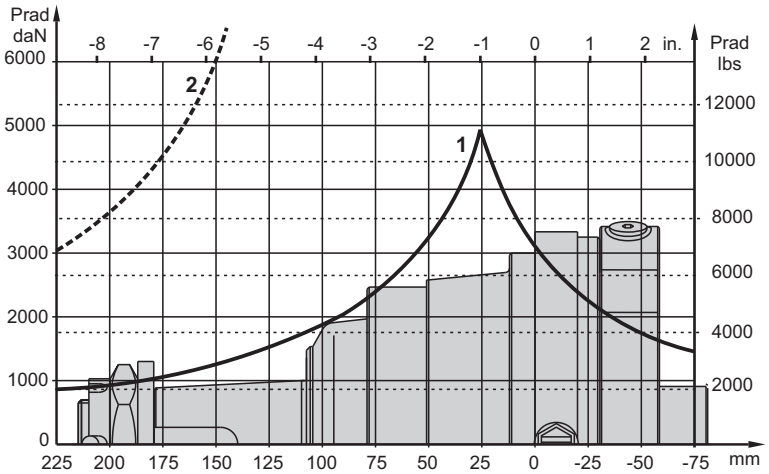

1 - Bearing curve: The curve applies to a B10 bearing life of 3000 hours at 200 RPM.

2 - Shaft curve: The curve represents Max. permissible radial shaft load with safety factor 3:1.

SPECIFICATION DATA

Description **LBS/313,316**		**21**	**29**	**43**	**65**	**85**	**110**	**130**
*Min. Static Torque,	daNm [lb-in]	18-23 [1593-2036]	28-33 [2478-2921]	42-47 [3717-4160]	61-71 [5399-6285]	83-94 [7346-8320]	108-118 [9559-10444]	127-137 [11240-12125]
Opening Pressure, bar [PSI]	min**	4-5 [58-72]	6-7 [87-101]	9-10 [130-145]	13-15 [188-217]	18-20 [261-290]	23-25 [333-362]	27-29 [391-420]
	max	300 [4350]						
Min. oil quantity for brake releasing,	cm³ [in³]	8 ÷ 9 [.488 ÷ .549]						
Oil volume,	cm³ [in³]	250 [15.25]						
Max. Pressure in drain space,	bar [PSI]	5 [72]						
Weight for .../313 .../316	kg [lb]	25 [55.1] 26 [57.3]						

* Static torque is obtained at working pressure - 0 bar.

** The indicated value is a difference between the inlet pressure for driving of the brake and the drain pressure. Brakes must always have a drain line.

SHAFT EXTENSIONS

C - ø50 straight, Parallel key A14x9x70 DIN 6885
Max. Torque 271,2 daNm [24000 lb-in]

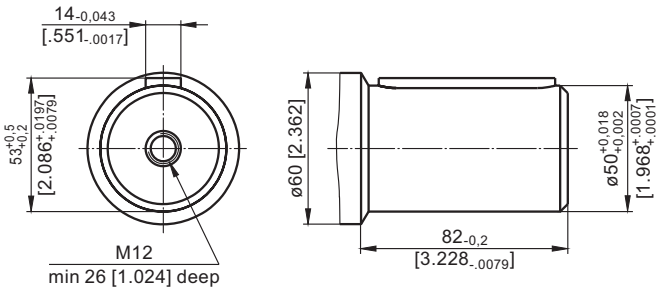

SH - ø2⅛" splined, 16 DP 8/16 ANS B92.1-1976
Max. Torque 271,2 daNm [24000 lb-in]

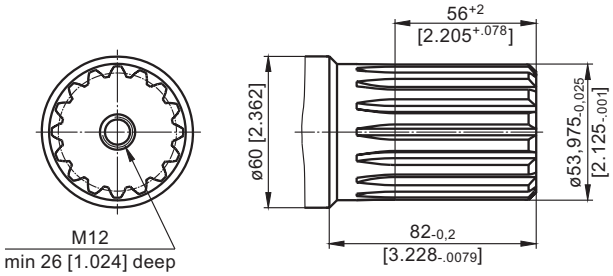

K - tapered 1:10, Parallel key B16x10x32 DIN 6885
Max. Torque 271,2 daNm [24000 lb-in]

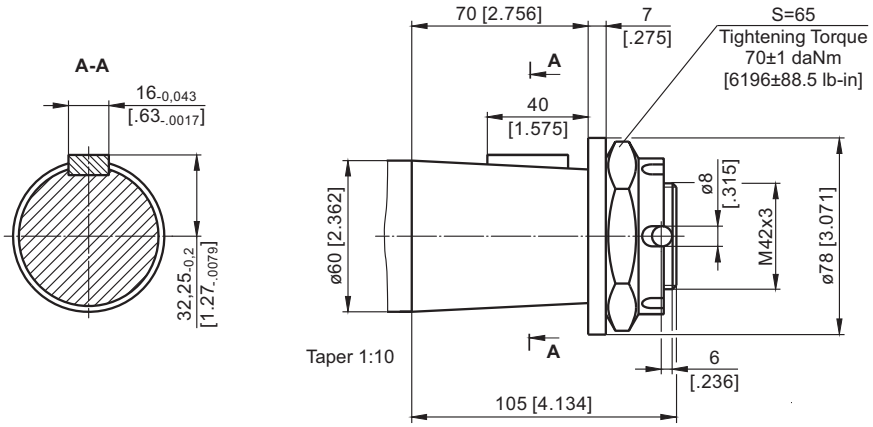

mm [in]

INTERNAL SPLINE DATA for THE ATTACHED COMPONENT

Standard ANS B92.1-1970, class 5
[m=2.54; corrected x.m=+1,0]

Fillet Root Side Fit		mm	inch
Number of Teeth	z	16	16
Diametral Pitch	DP	10/20	10/20
Pressure Angle		30°	30°
Pitch Dia.	D	40,640	1.6
Major Dia.	Dri	$45{,}2^{+0{,}4}$	1.796÷1.780
Minor Dia.	Di	$38{,}5^{+0{,}039}$	1.5175÷1.516
Space Width [Circular]	Lo	5,18±0,037	.2055÷.2025
Fillet Radius	R	0,4	.015
Max. Measurement between Pins	L	$32{,}47^{+0{,}15}$	1.284÷1.278
Pin Dia.	d	5,6±0,001	.22051÷.22043

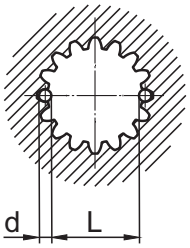

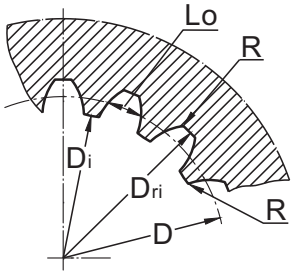

Hardening Specification:
HV=750±50 on the surface.
HV=560 at 0,7±0,2 mm [.035±.019in] case depth
Material: 20 MoCr4 EN 10084 or better.

ORDER CODE

	1		2	3	4	5
L B S /		**-**				

Pos.1 - **Design code**

313	- for MVS motors
316	- for MVS motors (wheel mount)

Pos.2 - **Static Torque code** (see Specification data)

21, 29, 43, 65, 85, 110, 130

Pos.3 - **Output Shaft Extensions***

C	- ø50 straight, Parallel key A14x9x70 DIN6885
SH	- ø2⅛" splined, ANSI B 92.1-1976
K	- ø60 tapered 1:10, Parallel key B16x10x32 DIN6885

Pos.4 - **Option** (Paint)**

omit	- no Paint
P	- Painted
PC	- Corrosion Protected Paint

Pos.5 - **Design Series**

omit - Factory specified

NOTES:

* The permissible output torque for shafts must be not exceeded!
** The color is by customer's request.

The Disc Brakes are mangano-phosphatized as standard.

ATTENTION:

1. Hydraulic brake is delivered without oil (it is lubricated only).
2. In all brakes, friction discs and separators should be lubricated. Space is filled with 150 ÷ 300 cm^3 [9.15 ÷ 18.3 in^3] mineral oil HLP (DIN 51524) or HM (ISO 6743/4).

HYDRAULIC DISC BRAKES B...R - Wet

B...R brake is designed to be mounted to the wheels of low-speed agricultural and construction vehicles.

The advantage of these brakes is that despite the smallest possible dimensions they preserve long-term life of the bearings at high radial shaft load.

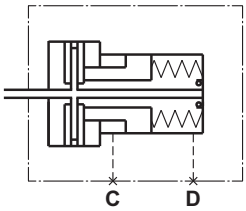

SPECIFICATION DATA

Type		B35R	B55R
Static Torque of Brake*,	daNm [lb-in]	35 [3100]	55 [4870]
Initial Release Pressure,	bar [PSI]	16 [232]	16 [232]
Full Release Pressure,	bar [PSI]	19 [275]	19 [275]
Max. Operating Pressure,	bar [PSI]	240 [3480]	240 [3480]
Max. Speed,	RPM	90	90
Cont. Radial Shaft Load**,	daN [lbs]	500 [1125]	500 [1125]
Max. Radial Shaft Load***,	daN [lbs]	700 [1575]	900 [2030]

* At 0 bar [0 PSI] back pressure.
** At radial shaft load of 500 daN [1125 lbs], applied at center-line of the key and speed of rotation 90 RPM, the bearing life is 1000 hours.
*** The permissible values of radial shaft load may occur for max. 10% of every minute.

DIMENSIONS and MOUNTING DATA

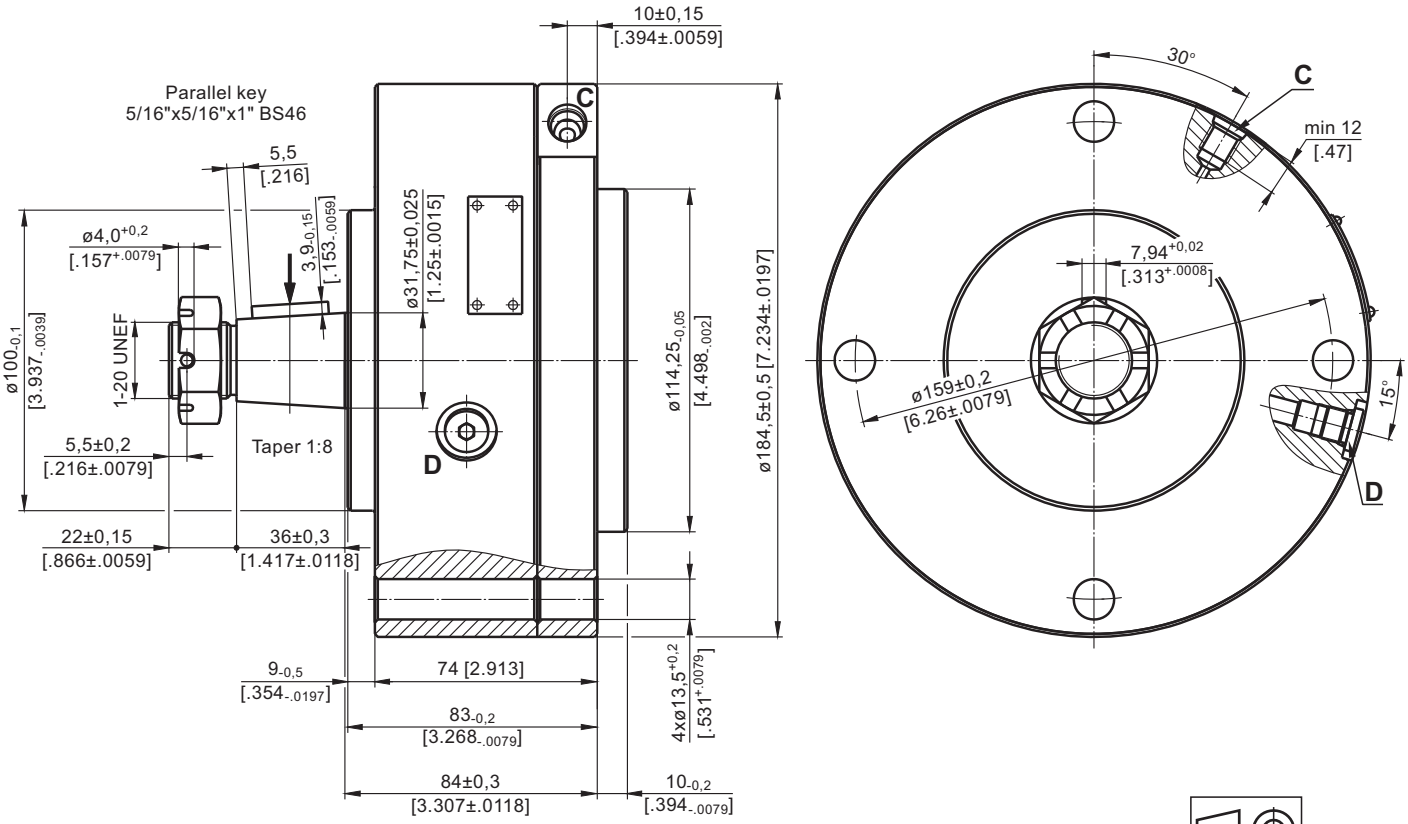

mm [in]

C: Brake Release Port - 7/16-20 UNF SAE J1926-1/ISO 11926-1
D: Drainage Tap - 7/16-20 UNF

M+S HYDRAULIC

HYDRAULIC DISC BRAKES B...T - Wet

B..T brake is designed to be mounted to the wheels of low-speed agricultural and construction vehicles.

The advantage of these brakes is that despite the smallest possible dimensions they preserve long-term life of the bearings at high radial shaft load.

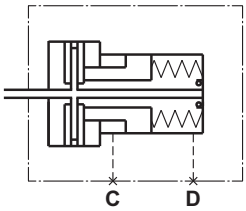

SPECIFICATION DATA

Type		B50T	B55T	B60T	B65T	B85T
Static Torque of Brake*,	daNm [lb-in]	50 [4425]	55 [4870]	60 [5310]	65 [5750]	85 [7525]
Initial Release Pressure,	bar [PSI]	16 [232]	16 [232]	16 [232]	17 [246]	18 [260]
Full Release Pressure,	bar [PSI]	19 [275]	19 [275]	19 [275]	20 [290]	22 [320]
Max. Operating Pressure,	bar [PSI]	240 [3480]	240 [3480]	240 [3480]	240 [3480]	240 [3480]
Max. Speed,	RPM	60	60	60	60	60
Cont. Radial Shaft Load**,	daN [lbs]	1000 [2250]	1000 [2250]	1000 [2250]	1000 [2250]	1500 [3370]
Max. Radial Shaft Load***,	daN [lbs]	2150 [4830]	2150 [4830]	2150 [4830]	2150 [4830]	2250 [5060]

* At 0 bar [0 PSI] back pressure.
** At radial shaft load of 1000 daN [2250 lbs], applied at center-line of the key and speed of rotation 60 RPM, the bearing life is 1000 hours.
*** The permissible values of radial shaft load may occur for max. 10% of every minute.

DIMENSIONS and MOUNTING DATA

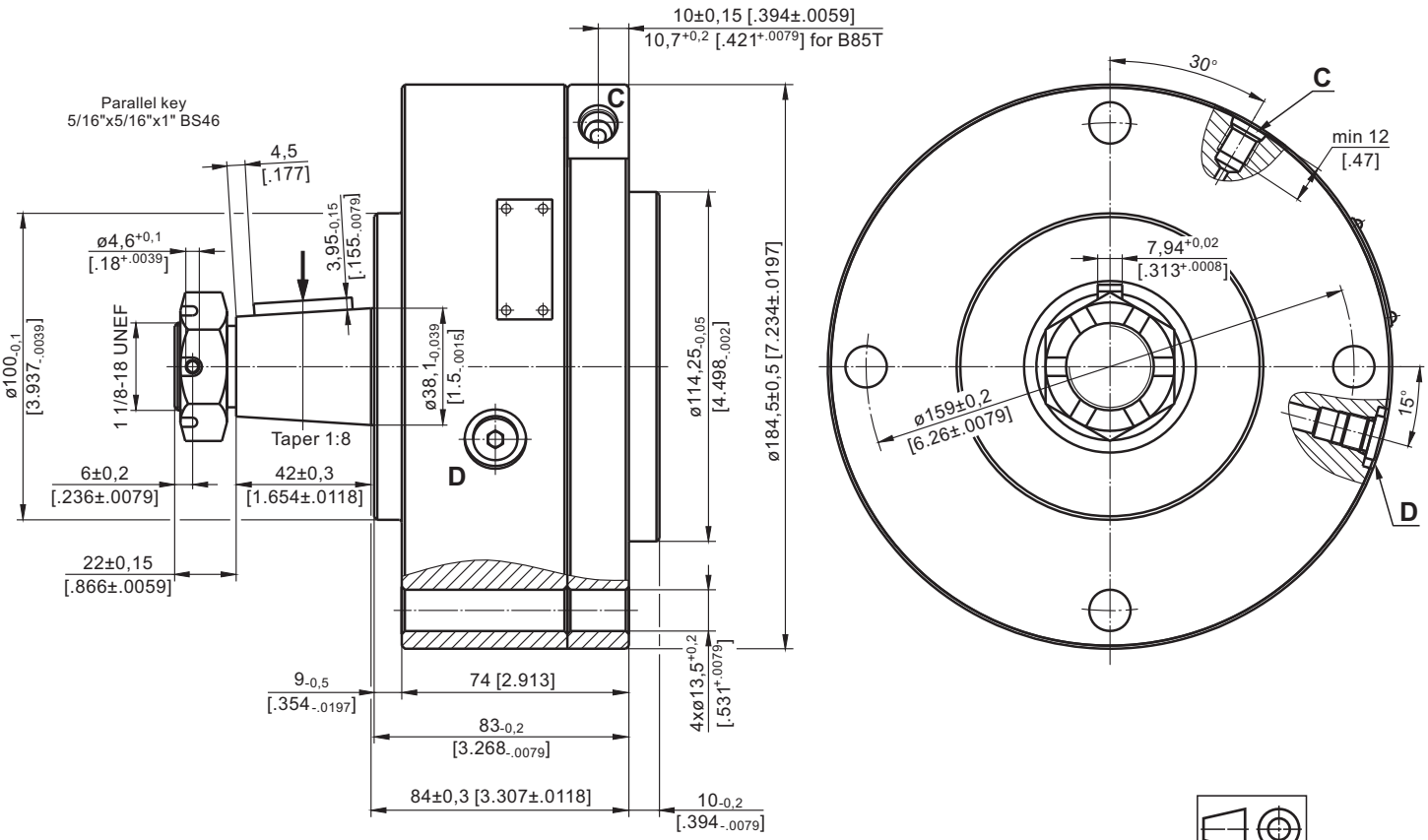

mm [in]

C: Brake Release Port - 7/16-20 UNF SAE J1926-1/ISO 11926-1
D: Drainage Tap - 7/16-20 UNF

HYDRAULIC DISC BRAKES B130K... - Wet

This brake is designed to be mounted to the wheels of low-speed agricultural and construction vehicles.

The advantage of these brakes is that despite the smallest possible dimensions they preserve long-term life of the bearings at high radial shaft load.

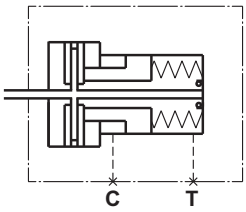

SPECIFICATION DATA

Type		B130K
Static Torque of Brake*,	daNm [lb-in]	143 [12565]
Min. Brake Release Pressure,	bar [PSI]	31-33 [119-478]
Max. Opening Pressure,	bar [PSI]	280 [4060]
Max. Permissible Pressure in Drain Line,	bar [PSI]	5 [72]
Weight,	kg [lb]	18,5 [40.8]

* At 0 bar [0 PSI] back pressure

DIMENSIONS and MOUNTING DATA

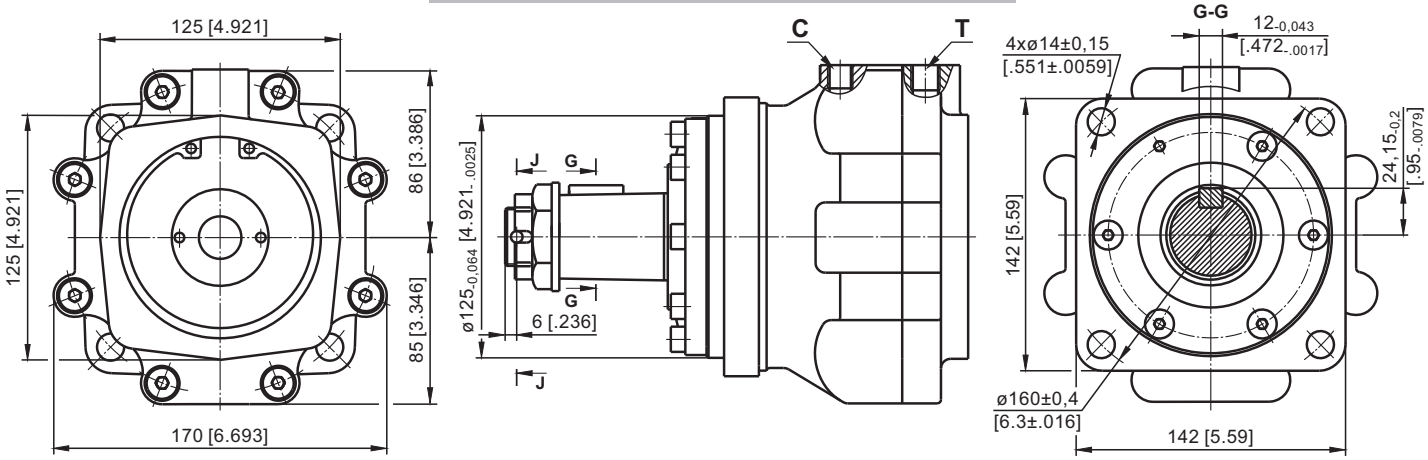

K - tapered 1:10, Parallel key B12x8x2 DIN 6885
Max. Torque 210 daNm [18587 lb-in]

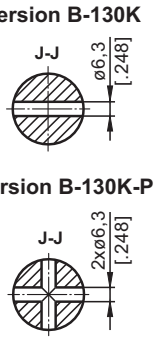

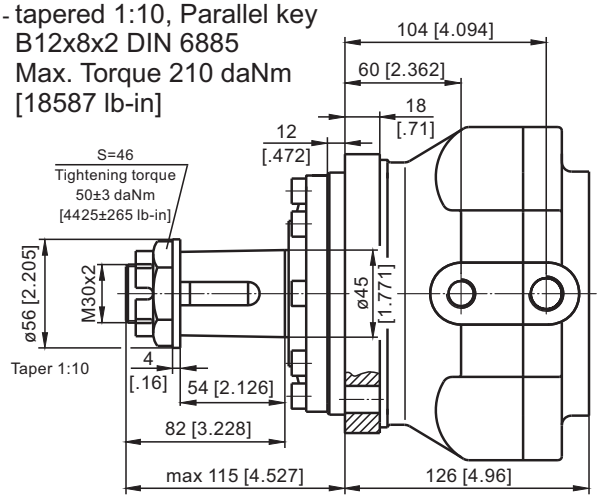

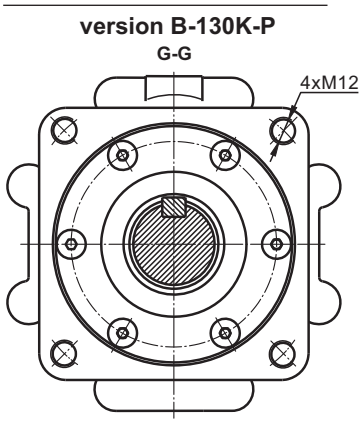

C - Brake release port, G1/4, 12 mm [.472 in] depth

D - Drainage tap, G3/8, 13 mm [.512] depth

PERMISSIBLE SHAFT LOADS

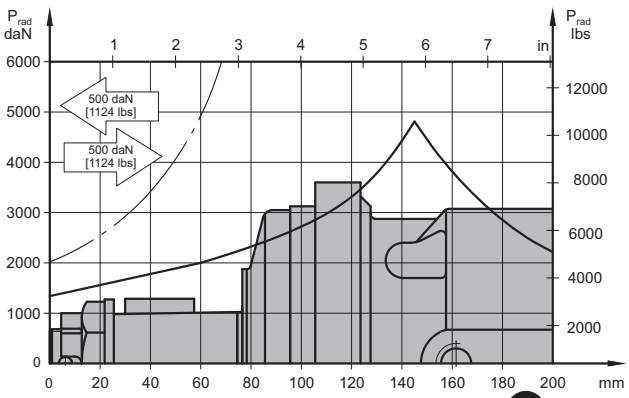

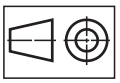

mm [in]

The curve applies to a B10 bearing life of 3000 hours at 200 RPM.

HYDRAULIC MOTOR-BRAKE B/MR

APPLICATION

»Conveyors
»Feeding mechanism of robots and manipulators
»Metal working machines
»Textile machines
»Agricultural machines
»Food industries
»Grass cutting machinery etc.

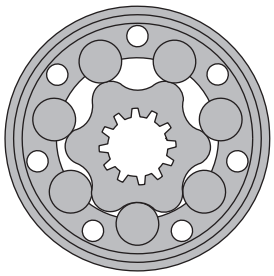

CONTENTS

Specification data 22
Dimensions and mounting ..... 23÷24
Shaft extensions 24
Permissible shaft loads 25
Order code 25

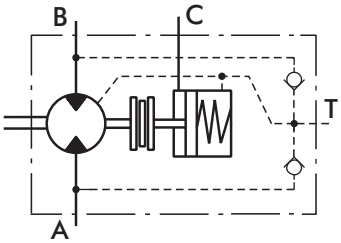

OPTIONS

»Model - Spool valve, roll-gerotor
»Fully integrated friction disk brake
»Motor with needle bearing
»Side port
»Shaft - straight
»BSPP ports

GENERAL

Max. Displacement, cm^3/rev [in^3/rev]	199,8 [12.19]
Max. Speed, [RPM]	600
Max. Torque, daNm [lb-in]	cont.: 45 [3980] int.: 50 [4425]
Max. Output, kW [HP]	13 [17.4]
Max. Pressure Drop, bar [PSI]	cont.: 175 [2540] int.: 200 [2900]
Max. Oil Flow, lpm [GPM]	75 [19.8]
Min. Speed, [RPM]	10
Permissible Shaft Loads, daNm [lb-in]	P_a=200 [450]
Pressure fluid	Mineral based- HLP(DIN 51524) or HM(ISO 6743/4)
Temperature range, ^oC [^oF]	-40÷140 [-40÷284]
Optimal Viscosity range, mm^2/s [SUS]	20÷75 [98÷347]
Filtration	ISO code 20/16 (Min. recommended fluid filtration of 25 microns)

Oil flow in drain line

Pressure drop bar [PSI]	Viscosity mm^2/s [SUS]	Oil flow in drain line lpm [GPM]
100 [1450]	20 [98]	2,5 [.660]
	35 [164]	1,8 [.476]
140 [2030]	20 [98]	3,5 [.925]
	35 [164]	2,8 [.740]

Pressure Losses

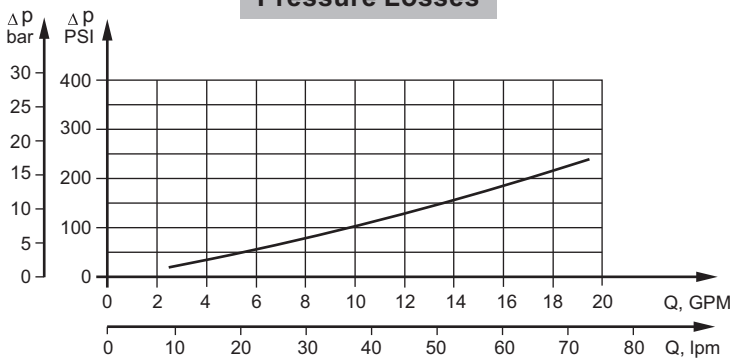

SPECIFICATION DATA

Type		B/MR 80	B/MR 100	B/MR 125	B/MR 160	B/MR 160 CB	B/MR 200	B/MR 200 CB
Displacement, cm^3/rev [in^3/rev]		80,3 [4.90]	99,8 [6.09]	125,7 [7.67]	159,6 [9.74]		199,8 [12.19]	
Max. Speed, [RPM]	Cont.	500	500	475	375		300	
	Int.*	600	600	600	470		375	
Max. Torque, daNm [lb-in]	Cont.	19,5 [1725]	24 [2125]	30 [2655]	30 [2655]	39 [3450]	30 [2655]	45 [3980]
	Int.*	22 [1947]	28 [2480]	34 [3010]	39 [3450]	43 [3805]	39 [3450]	50 [4425]
	Peak**	27 [2390]	32 [2832]	37 [3275]	46 [4070]	46 [4070]	56 [4955]	56 [4955]
Max. Output, kW [HP]	Cont.	8,4 [11.2]	10,8 [14.5]	12,5 [16.8]	10 [13.4]	11,5 [15.4]	7,8 [10.5]	11 [14.75]
	Int.*	9,6 [12.9]	12 [16.1]	14,5 [19.5]	12,5 [16.8]	14 [18.8]	12,4 [16.6]	13 [17.4]
Max. Output kW [HP]	Cont.	175 [2540]	175 [2540]	175 [2540]	135 [1960]	175 [2540]	105 [1523]	175 [2540]
	Int.*	200 [2900]	200 [2900]	200 [2900]	175 [2540]	200 [2900]	145 [2103]	200 [2900]
	Peak**	225 [3263]	225 [3263]	225 [3263]	225 [3263]	225 [3263]	225 [3263]	225 [3263]
Max. Oil Flow, lpm [GPM]	Cont.	40 [10.5]	50 [13.2]	60 [15.9]				
	Int.*	48 [12.7]	60 [15.9]	75 [19.8]				
Max. Inlet Pressure, bar [PSI]	Cont.	175 [2540]						
	Int.*	200 [2900]						
	Peak**	225 [3263]						
Max. Starting Pressure, bar [PSI]		10 [145]	10 [145]	9 [130]	7 [102]		5 [73]	
Min. Starting Torque, daNm [lb-in]	At max.press.drop Cont.	15 [1330]	20 [1770]	25 [2215]	24 [2124	32 [2832]	26 [2301]	41 [3628]
	At max.press.drop Int.*	17 [1505]	23 [2035]	28 [2480]	32 [2832]	37 [3275]	33 [2920]	46 [4071]
Min. Speed*, [RPM]**		10						
Static Torque of Brake, daNm [lb-in]		55 [4868]						
Min. Brake Release Pressure**, bar [PSI]**		13 [190]						
Max.Opening Pressure, bar [PSI]		200 [2900]						
Weight, kg [lb]		11,0 [24.3]	11,2 [24.7]	11,4 [25.2]	11,6 [25.6]	11,7 [25.8]	12,2 [26.9]	12,3 [27.12]

* Intermittent operation: the permissible values may occur for max. 10% of every minute.
** Peak load: the permissible values may occur for max. 1% of every minute.
*** For speeds lower than given, consult factory or your regional manager.
**** Motor-brakes must always have a drain line. The brake release pressure is the difference between the pressure in the brake release line and the pressure in the drain line

1. Intermittent speed and intermittent pressure must not occur simultaneously.
2. Recommended filtration is per ISO cleanliness code 20/16. A nominal filtration of 25 micron or better.
3. Recommend using a premium quality, anti-wear type mineral based hydraulic oil HLP(DIN51524) or HM (ISO 6743/4). If using synthetic fluids consult the factory for alternative seal materials.
4. Recommended minimum oil viscosity 13 mm²/s [70 SUS] at 50°C [122°F].
5. Recommended maximum system operating temperature is 82°C [180°F].
6. To assure optimum motor life fill with fluid prior to loading and run at moderate load and speed for 10-15 minutes.

DIMENSIONS and MOUNTING DATA

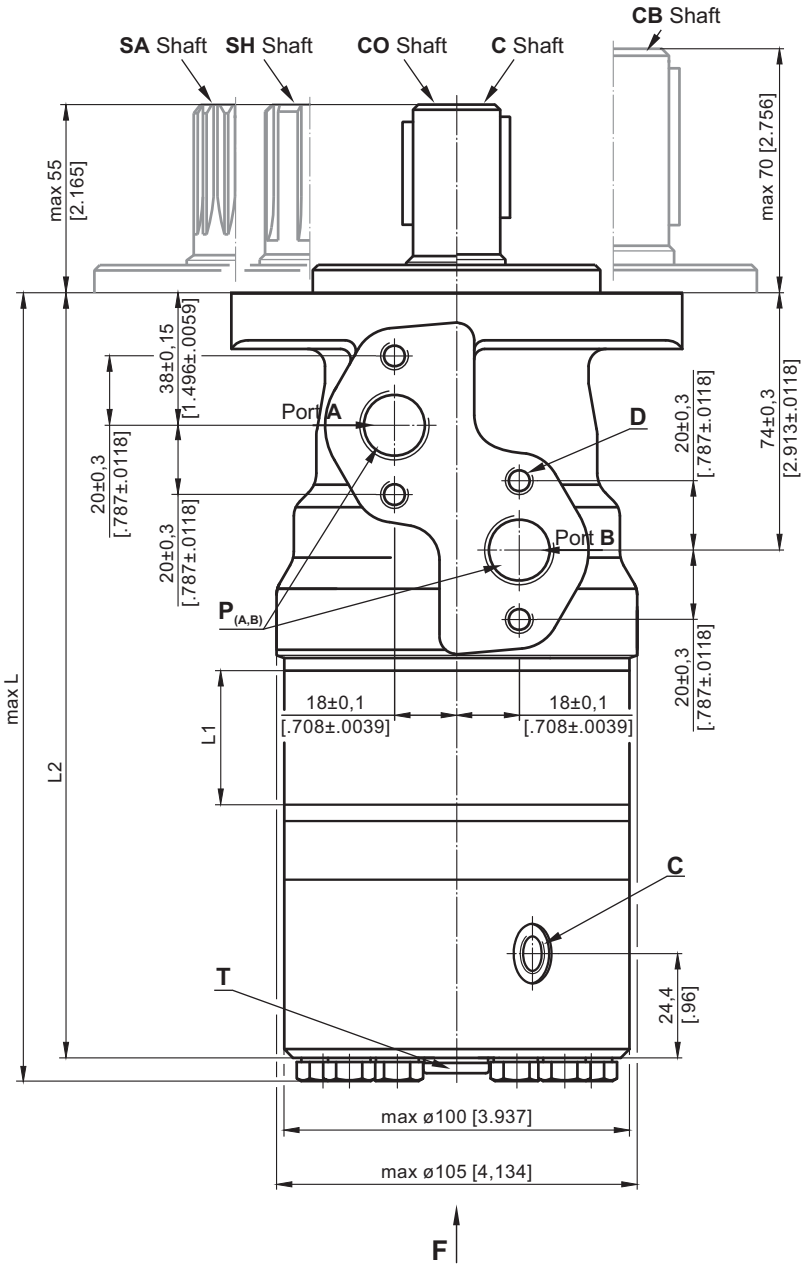

Shaft Dim.
See Page 24

Flange Dim.
See Page 24

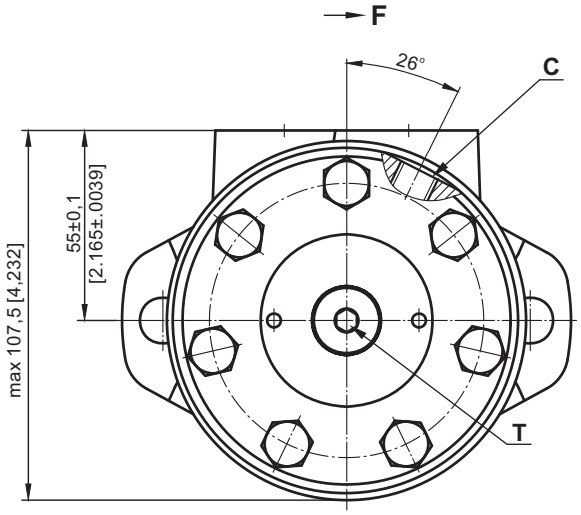

D : 4xM8 - 13 mm [.51 in] depth
C : G1/4 - 12 [.47 in] mm depth
P$_{(A,B)}$: 2xG1/2 - 15 [.59 in] mm depth
T : G1/4 - 10 mm [.393 in] depth

Type	L_1, in [mm]	L_2, in [mm]	L, in [mm]
B/MR 80	14,0 [.551]	205,5 [8.091]	213,5 [8.405]
B/MR 100	17,4 [.685]	209,0 [8.228]	217,0 [8.543]
B/MR 125	21,8 [.858]	213,5 [8.405]	221,5 [8.720]
B/MR 160	27,8 [1.095]	219,5 [8.642]	227,5 [8.957]
B/MR 200	34,8 [1.37]	226,5 [8.917]	234,5 [9.232]

mm [in]

Standard Rotation
Viewed from Shaft End
Port **A** Pressurized - **CW**
Port **B** Pressurized - **CCW**

Reverse Rotation
Viewed from Shaft End
Port **A** Pressurized - **CCW**
Port **B** Pressurized - **CW**

SHAFT EXTENSIONS

C - ø25 straight, Parallel key A8x7x32 DIN 6885
Max. Torque 34 daNm [3010 lb-in]

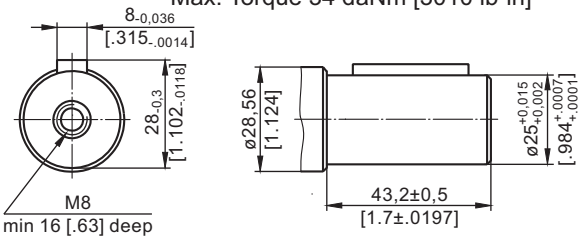

CO - ø1 straight, Parallel key ¼"x¼"x1¼" BS46
Max. Torque 34 daNm [3010 lb-in]

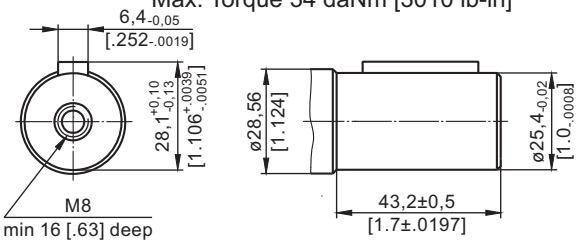

SH - splined, BS 2059 (SAE 6B)
Max. Torque 40 daNm [3540 lb-in]

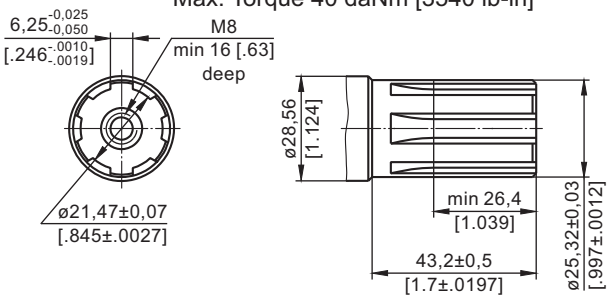

SA - splined, B25x22h9 DIN 5482
Max. Torque 40 daNm [3540 lb-in]

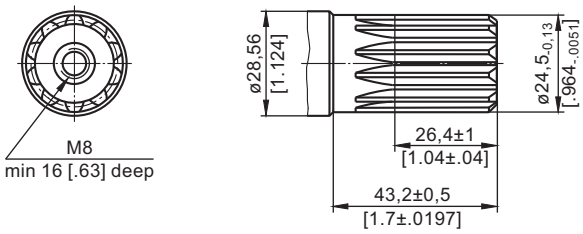

CB - ø32 straight, Parallel key A10x8x45 DIN 6885
Max. Torque 77 daNm [6815 lb-in]

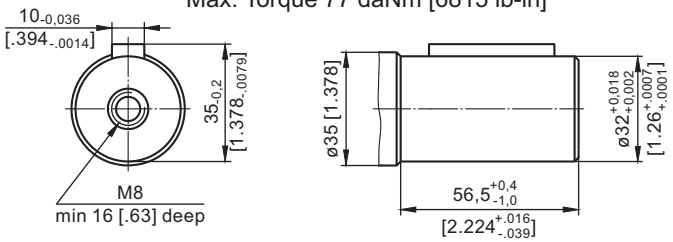

MOUNTING

Oval Mount (2 Holes)

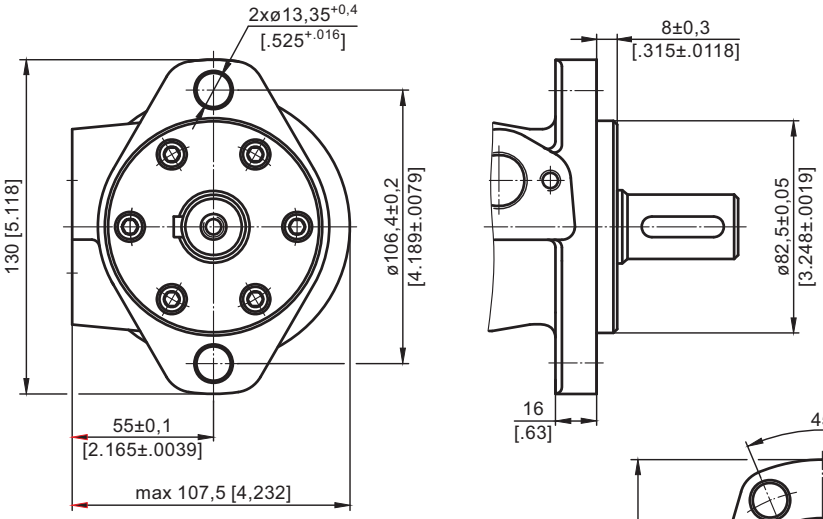

F - Oval Mount (4 Holes)

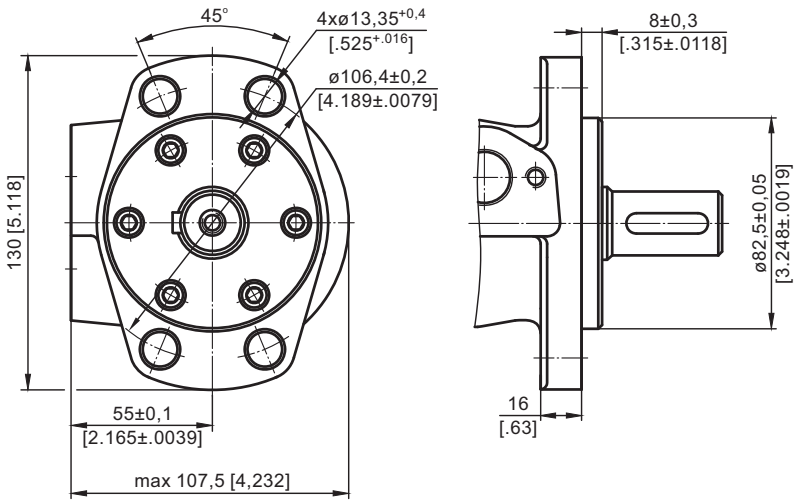

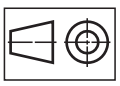
mm [in]

PERMISSIBLE SHAFT LOADS

The permissible radial shaft load **P_{rad}** depends on the speed **n**, RPM; distance **L** from the point of load to the mounting flange and shaft version.

Mounting Flange	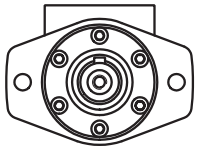	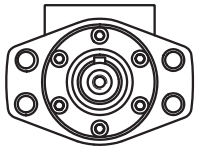
Shaft Version	**cylindrical - C, CO** **splined - SH, SA**	**cylindrical - CB**
Radial Shaft Load P_{rad}, in mm	$\frac{800}{n} \times \frac{25000}{95+L}$, daN*	$\frac{800}{n} \times \frac{18750}{95+L}$, daN*
Radial Shaft Load P_{rad}, in inch	$\frac{800}{RPM} \times \frac{2215}{3.74+L}$, lbs*	$\frac{800}{RPM} \times \frac{1660}{3.74+L}$, lbs*

* n ≤ 200 RPM; max Prad=800 daN [1800 lbs] n ≥200 RPM; L < 55 mm [2.2 in]

Radial Shaft Load P_{rad} for C, CO Shaft Extensions by L=30 mm [1.18 in]

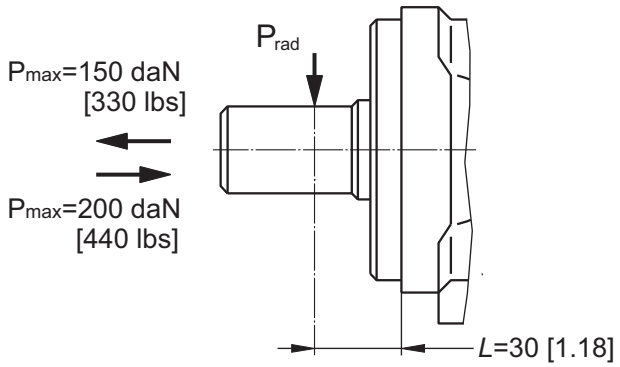

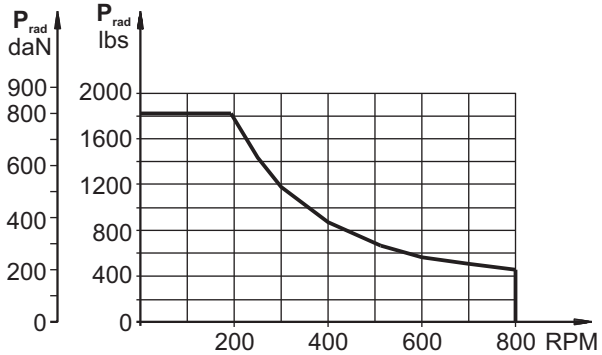

ORDER CODE

	1	2	3	4	5
B / M R					

Pos.1 - Mounting Flange

omit - Oval mount, two holes

F - Oval mount, four holes

Pos.2 - Displacement code

80 - 80,3 cm^3/rev [4.90 in^3/rev]

100 - 99,8 cm^3/rev [6.09 in^3/rev]

125 - 125,7 cm^3/rev [7.67 in^3/rev]

160 - 159,6 cm^3/rev [9.74 in^3/rev]

200 - 199,8 cm^3/rev [12.19 in^3/rev]

Pos.3 - Shaft Extensions*

C - ø25 straight, Parallel key A8x7x32 DIN6885

CO - ø1" straight, Parallel key ¼"x¼"x1¼" BS46

SH - ø25,32 splined BS 2059 (SAE 6B)

SA - ø24,5 splined B 25x22 DIN 5482

CB - ø32 straight, Parallel key A10x8x45 DIN 6885

Pos.4 - Special Features (see page 72)

Pos.5 - Design Series

omit - Factory specified

NOTES: * The permissible output torque for shafts must not be exceeded!

The motor-brakes are mangano-phosphatized as standard.

HYDRAULIC MOTOR-BRAKE BD/MR

APPLICATION

- » Conveyors
- » Feeding mechanism of robots and manipulators
- » Metal working machines
- » Textile machines
- » Agricultural machines
- » Food industries
- » Mining machinery etc.

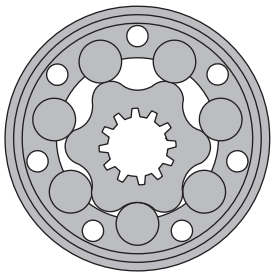

CONTENTS

Specification data 27
Dimensions and mounting .... 28÷29
Shaft extensions 29
Permissible shaft loads 30
Order code 30

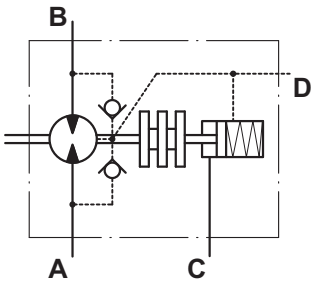

OPTIONS

- » Model - Spool valve, roll-gerotor
- » Fully integrated friction disk brake
- » Side port
- » Shaft - straight
- » BSPP ports

GENERAL

Max. Displacement, cm^3/rev [in^3/rev]	199,8 [12.19]
Max. Speed, [RPM]	600
Max. Torque, daNm [lb-in]	cont.: 45 [3980] int.: 50 [4425]
Max. Output, kW [HP]	13 [17.4]
Max. Pressure Drop, bar [PSI]	cont.: 175 [2540] int.: 200 [2900]
Max. Oil Flow, lpm [GPM]	75 [19.8]
Min. Speed, [RPM]	10
Permissible Shaft Loads, daN [lb-in]	P_a=200 [450]
Pressure fluid	Mineral based- HLP(DIN 51524) or HM(ISO 6743/4)
Temperature range, ^oC [^oF]	-40÷140 [-40÷284]
Optimal Viscosity range, mm^2/s [SUS]	20÷75 [98÷347]
Filtration	ISO code 20/16 (Min. recommended fluid filtration of 25 microns)

Oil flow in drain line

Pressure drop bar [PSI]	Viscosity mm^2/s [SUS]	Oil flow in drain line lpm [GPM]
100 [1450]	20 [98]	2,5 [.660]
	35 [164]	1,8 [.476]
140 [2030]	20 [98]	3,5 [.925]
	35 [164]	2,8 [.740]

Pressure Losses

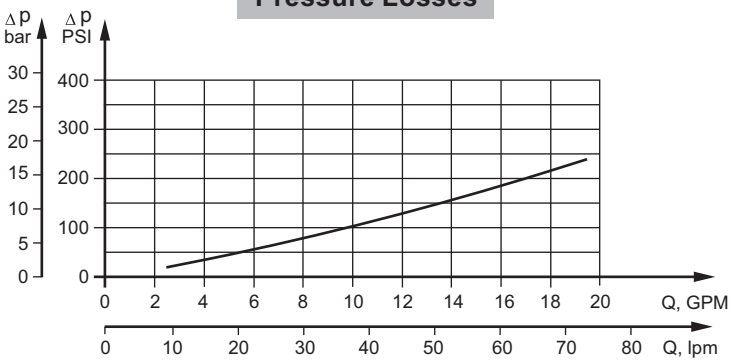

SPECIFICATION DATA

Type		BD/MR 80	BD/MR 100	BD/MR 125	BD/MR 160	BD/MR 200	BD/MR 250	BD/MR 315	BD/MR 400
Displacement, cm^3/rev [in^3/rev]		80,3 [4.9]	99,8 [6.09]	125,7 [7.67]	159,6 [9.74]	199,8 [12.19]	250,1 [15.26]	315,7 [19.27]	397 [24.23]
Max. Speed, [RPM]	Cont.	750	600	475	375	300	240	190	150
	Int.*	940	750	600	470	375	300	240	190
Max. Torque, daNm [lb-in]	Cont.	20 [1770]	24 [2124]	30 [2655]	39 [3452]	38,5 [3410]	39 [3450]	36 [3185]	38 [3360]
	Int.*	22 [1947]	28 [2478]	34 [3010]	43 [3805]	46 [4070]	47 [4160]	47 [4160]	47 [4160]
	Peak**	27 [2390]	32 [2832]	37 [3275]	46 [4070]	56 [4960]	60 [5310]	61 [5400]	61 [5400]
Max. Output, kW [HP]	Cont.	12,5 [17]	13 [17.4]	12,5 [16.8]	11,5 [15.4]	9 [12]	8 [10.7]	5 [6.7]	4,8 [6.4]
	Int.*	15 [20.1]	15 [20.1]	14,5 [19.4]	14 [18.8]	12 [16.1]	9,5 [12.7]	8 [10.7]	6,8 [9.1]
Max. Output kW [HP]	Cont.	175 [2540]	175 [2540]	175 [2540]	175 [2540]	175 [2540]	175 [2540]	175 [2540]	175 [2540]
	Int.*	200 [2900]	200 [2900]	200 [2900]	200 [2900]	200 [2900]	200 [2900]	200 [2900]	200 [2900]
	Peak**	225 [3260]	225 [3260]	225 [3260]	225 [3260]	225 [3260]	225 [3260]	225 [3260]	225 [3260]
Max. Oil Flow, lpm [GPM]	Cont.	60 [16]	60 [16]	60 [16]	60 [16]	60 [16]	60 [16]	60 [16]	60 [16]
	Int.*	75 [20]	75 [20]	75 [20]	75 [20]	75 [20]	75 [20]	75 [20]	75 [20]
Max. Return Pressure, bar [PSI]	Cont.	175 [2540]	175 [2540]	175 [2540]	175 [2540]	175 [2540]	175 [2540]	175 [2540]	175 [2540]
	Int.*	200 [2900]	200 [2900]	200 [2900]	200 [2900]	200 [2900]	200 [2900]	200 [2900]	200 [2900]
	Peak**	225 [3260]	225 [3260]	225 [3260]	225 [3260]	225 [3260]	225 [3260]	225 [3260]	225 [3260]
Max. Pressure Drop, bar [PSI]	Cont.	175 [2540]	175 [2540]	175 [2540]	175 [2540]	140 [2030]	110 [1600]	85 [1230]	65 [940]
	Int.*	200 [2900]	200 [2900]	200 [2900]	200 [2900]	175 [2540]	140 [2030]	115 [1670]	90 [1300]
	Peak**	225 [3260]	225 [3260]	225 [3260]	225 [3260]	225 [3260]	200 [2900]	150 [2175]	115 [1670]
Min. Starting Torque, daNm [lb-in]		15 [1330]	20 [1770]	25 [2215]	32 [2832]	33 [2920]	31 [2745]	31,5 [2875]	31,5 [2875]
Min. Holding Torque, daNm [lb-in]		40 [3540]							
Min. Release Pressure*, bar [PSI]**		21 [305]							
Max. Brake Release Pressure*, bar [PSI]**		200 [2900]							
Weight, kg [lb]		11,5 [25.35]	12 [26.45]	12,3 [27.12]	12,5 [27.56]	13 [28.66]	13,5 [29.76]	14 [30.86]	14,5 [31.97]

* Intermittent operation: the permissible values may occur for max. 10% of every minute.
** Peak load: the permissible values may occur for max. 1% of every minute.
*** For speeds lower than given, consult factory or your regional manager.
**** Motor-brakes must always have a drain line. The brake release pressure is the difference between the pressure in the brake release line and the pressure in the drain line

1. Intermittent speed and intermittent pressure must not occur simultaneously.
2. Recommended filtration is per ISO cleanliness code 20/16. A nominal filtration of 25 micron or better.
3. Recommend using a premium quality, anti-wear type mineral based hydraulic oil HLP(DIN51524) or HM (ISO 6743/4). If using synthetic fluids consult the factory for alternative seal materials.
4. Recommended minimum oil viscosity 13 mm²/s [70 SUS] at 50°C [122°F].
5. Recommended maximum system operating temperature is 82°C [180°F].
6. To assure optimum motor life fill with fluid prior to loading and run at moderate load and speed for 10-15 minutes.

DIMENSIONS and MOUNTING DATA

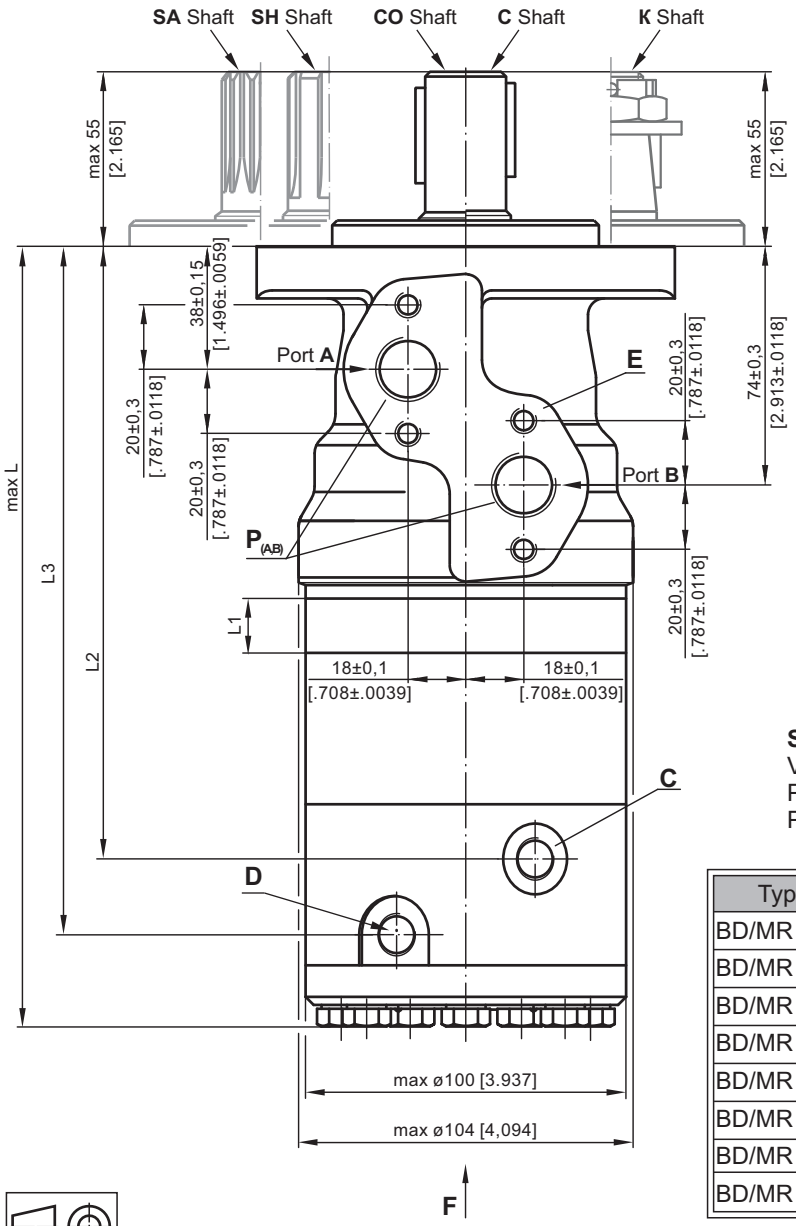

$P_{(A, B)}$: 2xG1/2, 15 mm [.59 in] depth
C : G1/4, 12 mm [.47 in] depth
D : G1/4, 12 mm [.47 in] depth
E : 4xM8, 13 mm [.51 in] depth

Shaft Dim.
See Page 29

Flange Dim.
See Page 29

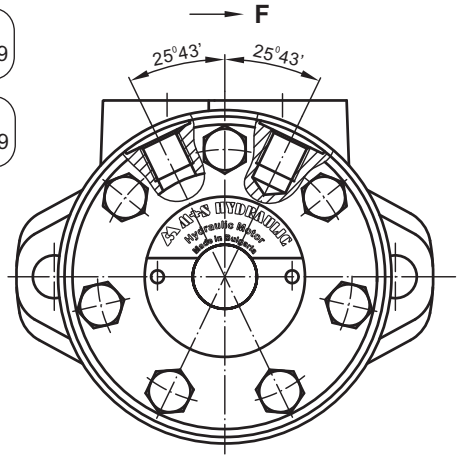

Standard Rotation
Viewed from Shaft End
Port **A** Pressurized - **CW**
Port **B** Pressurized - **CCW**

Reverse Rotation
Viewed from Shaft End
Port **A** Pressurized - **CCW**
Port **B** Pressurized - **CW**

Type	L1, mm [in]	L2, mm [in]	L3, mm [in]	Lmax, mm [in]
BD/MR 80	14,0 [.55]	187,2 [7.37]	210,7 [8.30]	240,0 [9.45]
BD/MR 100	17,4 [.69]	190,6 [7.50]	214,1 [8.43]	243,0 [9.57]
BD/MR 125	21,8 [.89]	195,0 [7.68]	218,5 [8.60]	247,5 [9.74]
BD/MR 160	27,8 [1.10]	201,0 [7.91]	224,5 [8.84]	253,5 [9.98]
BD/MR 200	34,8 [1.37]	208,0 [8.19]	231,5 [9.11]	260,5 [10.26]
BD/MR 250	43,5 [1.71]	216,7 [8.53]	240,0 [9.45]	269,0 [10.59]
BD/MR 315	54,8 [2.16]	228,0 [8.98]	251,5 [9.90]	280,5 [11.04]
BD/MR 400	69,4 [2.73]	242,6[9.55]	266,1 [10.48]	295,0 [11.61]

mm [in]

MAX. PERMISSIBLE SHAFT SEAL PRESSURE

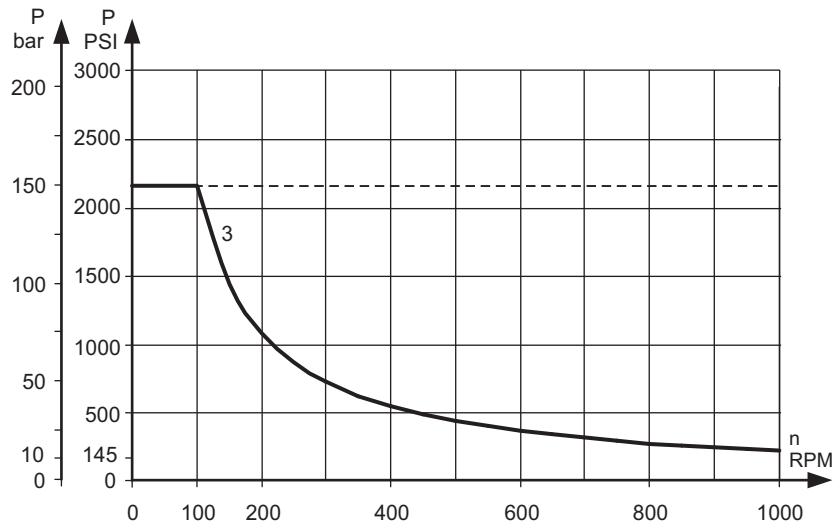

——— - continuous operations
- - - - - - intermittent operations

SHAFT EXTENSIONS

C - ø25 straight, Parallel key A8x7x32 DIN 6885
Max. Torque 34 daNm [3010 lb-in]

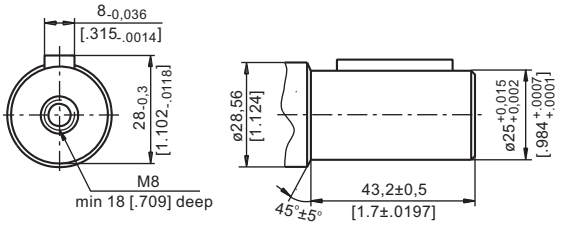

CO - ø1" straight, Parallel key ¼"x¼"x1¼" BS46
Max. Torque 34 daNm [3010 lb-in]

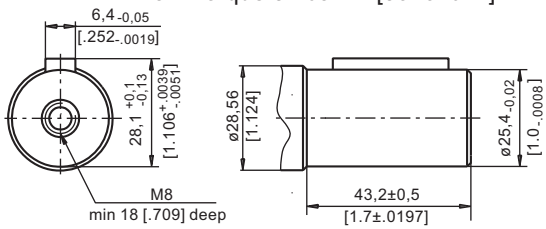

SH - splined, BS 2059 (SAE 6B)
Max. Torque 40 daNm [3540 lb-in]

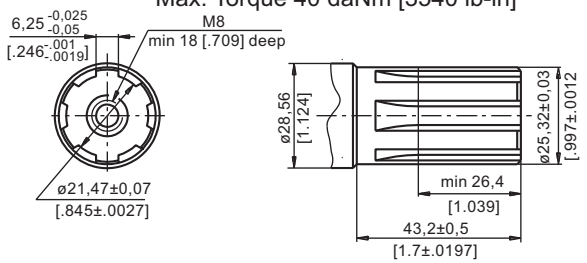

SA - splined, B25x22h9 DIN 5482
Max. Torque 40 daNm [3540 lb-in]

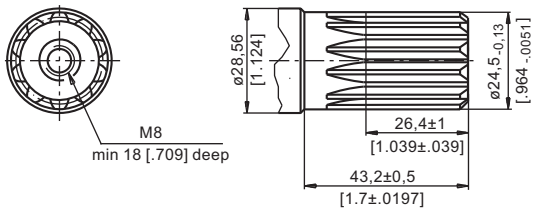

K - tapered 1:10, Parallel key B5x5x14 DIN 6885
Max. Torque 40 daNm [3540 lb-in]

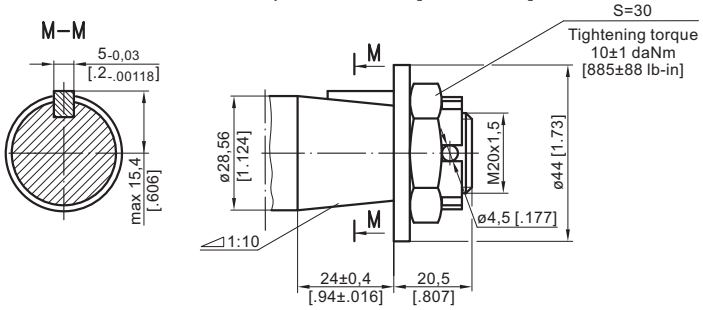

MOUNTING

Oval Mount (2 Holes)

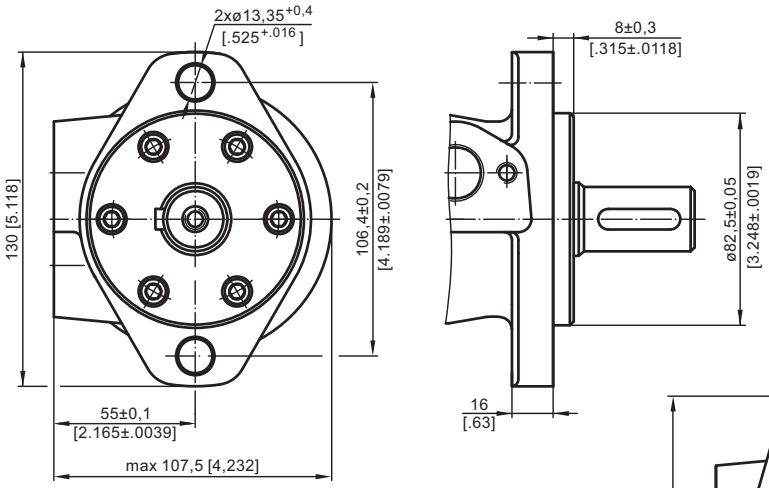

F - Oval Mount (4 Holes)

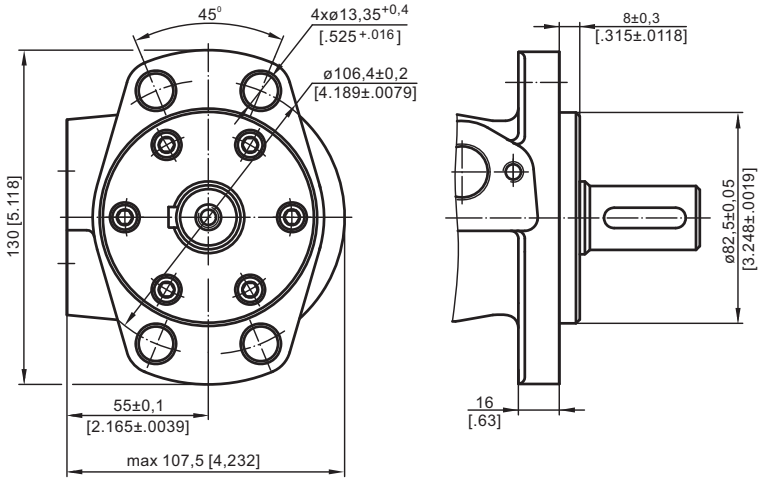

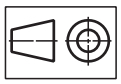
mm [in]

PERMISSIBLE SHAFT LOADS

The permissible radial shaft load **P_{rad}** depends on the speed **n**, RPM; distance **L** from the point of load to the mounting flange and shaft version.

Mounting Flange	
Radial Shaft Load P_{rad}, in mm	$\frac{800}{n} \times \frac{25000}{95+L}$, daN*
Radial Shaft Load P_{rad}, in inch	$\frac{800}{RPM} \times \frac{2215}{3.74+L}$, lbs*

* n ≤ 200 RPM; max Prad=800 daN [1800 lbs] n ≥200 RPM; L < 55 mm [2.2 in]

Radial Shaft Load P_{rad} for C, CO Shaft Extensions by L=30 mm [1.18 in]

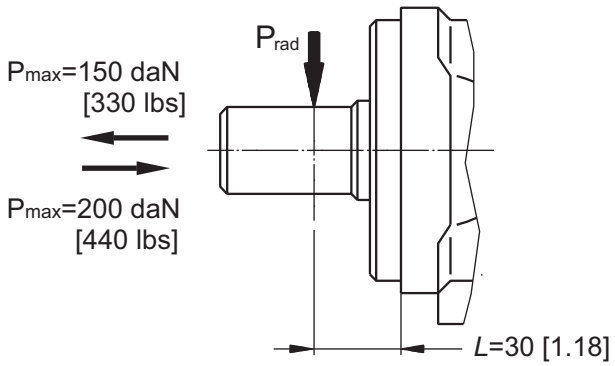

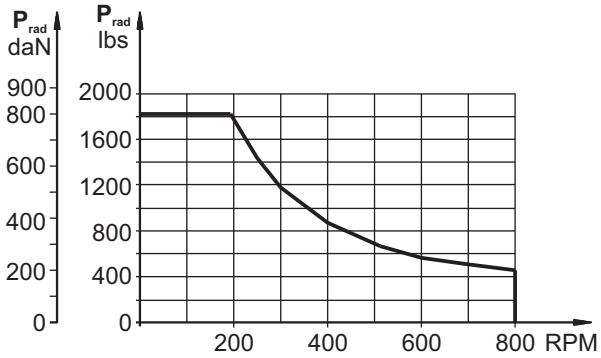

Permissible shaft loads for BD/MR(F)N...

1. Max. permissible radial shaft load
2. Drawing by n= 50 rpm
3. Drawing by n=200 rpm
4. Drawing by n=800 rpm

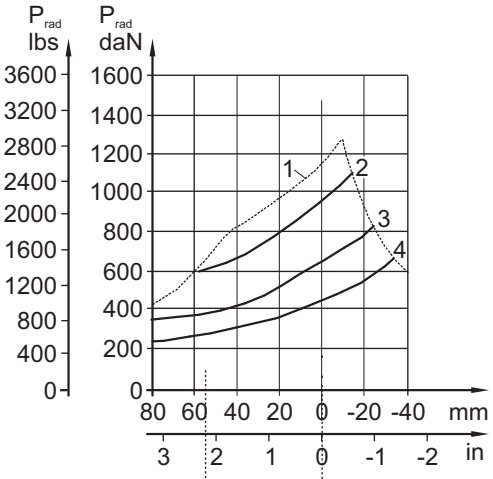

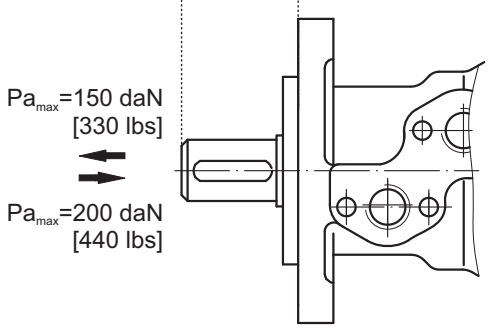

ORDER CODE

	1	2	3	4	5	6	7
BD/MR							

Pos.1 - Mounting Flange

omit - Oval mount, two holes
F - Oval mount, four holes

Pos.2 - Option (needle bearings)

omit - none
N - with needle bearings

Pos.3 - Displacement code

80 - 80,3 cm^3/rev [4.90 in^3/rev]
100 - 99,8 cm^3/rev [6.09 in^3/rev]
125 - 125,7 cm^3/rev [7.67 in^3/rev]
160 - 159,6 cm^3/rev [9.74 in^3/rev]
200 - 199,8 cm^3/rev [12.19 in^3/rev]
250 - 250,1 cm^3/rev [15.26 in^3/rev]
315 - 315,7 cm^3/rev [19.26 in^3/rev]
400 - 397,0 cm^3/rev [24.40 in^3/rev]

Pos.4 - Shaft Extensions*

C - ø25 straight, Parallel key A8x7x32 DIN6885
CO - ø1" straight, Parallel key ¼"x¼"x1¼" BS46
SH - ø25,32 splined BS 2059 (SAE 6B)
K - ø28,56 tapered 1:10, Parallel key B5x5x14 DIN6885
SA - ø24,5 splined B25x22 DIN 5482

Pos.5 - Shaft Seal Version

D - Standard shaft seal

Pos.6 - Special Features (see page 72)

Pos.7 - Design Series

omit - Factory specified

NOTES:

* The permissible output torque for shafts must not be exceeded!

The motor-brakes are mangano-phosphatized as standard.

HYDRAULIC MOTOR-BRAKE MT/B

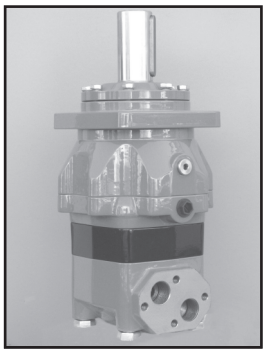

APPLICATION

» Conveyors
» Metal working machines
» Agricultural machines
» Road building machines
» Mining machinery
» Food industries
» Special vehicles
» Plastic and rubber machinery etc.

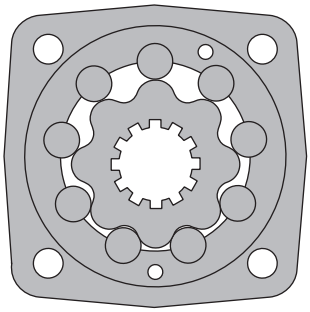

With check valves

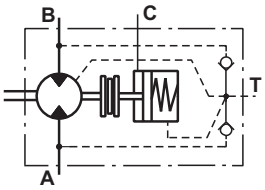

Without check valves “1"

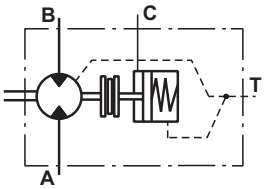

CONTENTS

Specification data 32
Dimensions and mounting 33
Permissible shaft loads 33
Shaft extensions 34
Order code 34

OPTIONS

» Model - Disc valve, roll-gerotor;
» Fully integrated friction disk brake;
» Side ports;
» Shafts - straight, splined and tapered;
» BSPP ports
» Other special features

GENERAL

Max. Displacement, cm^3/rev [in^3/rev]	724,3 [44.2]
Max. Speed, [RPM]	780
Max. Torque, daNm [lb-in]	cont.: 130 [11505] int.: 148 [13100]
Max. Output, kW [HP]	40 [54]
Max. Pressure Drop, bar [PSI]	cont.: 200 [2900] int.: 240 [3450]
Max. Oil Flow, lpm [GPM]	150 [40]
Min. Speed, [RPM]	5
Permissible Shaft Loads, daN [lbs]	P_a=1000 [2248]
Pressure fluid	Mineral based- HLP(DIN 51524) or HM(ISO 6743/4)
Temperature range, °C [°F]	-40÷140 [-40÷284]
Optimal Viscosity range, mm^2/s [SUS]	20÷75 [98÷347]
Filtration	ISO code 20/16 (Min. recommended fluid filtration of 25 microns)

Oil flow in drain line

Pressure drop bar [PSI]	Viscosity mm^2/s [SUS]	Oil flow in drain line lpm [GPM]
140 [2030]	20 [98]	2,5 [.66]
	35 [164]	1,5 [.39]
210 [3045]	20 [98]	5 [1.32]
	35 [164]	3 [.79]

Pressure Losses

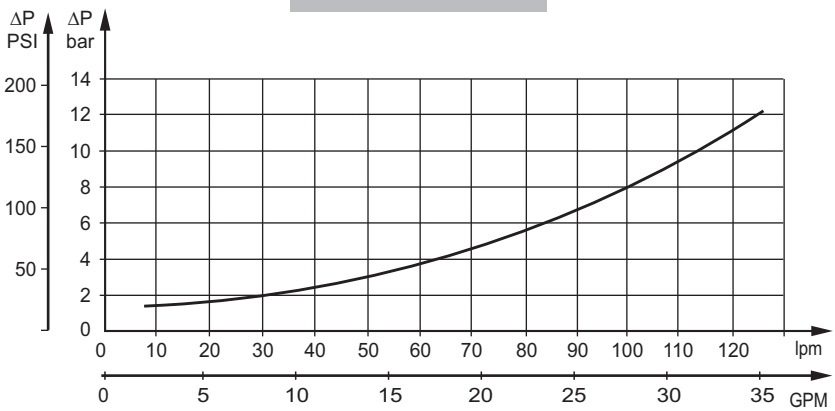

M+S HYDRAULIC

SPECIFICATION DATA

Type		MT/B 160	MT/B 200	MT/B 250	MT/B 315	MT/B 400	MT/B 500	MT/B 630	MT/B 725
Displacement, cm^3/rev [in^3/rev]		161,1 [9.83]	201,4 [12.29]	251,8 [15.36]	326,3 [19.90]	410,9 [25.06]	523,6 [31.95]	631,2 [38.5]	724,3 [44.2]
Max. Speed, [RPM]	Cont.	625	625	500	380	305	240	197	172
	Int.*	780	750	600	460	365	285	234	209
Max. Torque daNm [lb-in]	Cont.	47 [4160]	59 [5220]	73 [6460]	95 [8410]	108 [9560]	122 [10800]	130 [11505]	127 [11240]
	Int.*	56 [4960]	71 [6285]	88 [7790]	114 [10090]	126 [11150]	137 [12125]	148 [13100]	147 [13010]
Max. Output kW [HP]	Cont.	26,5 [36]	33,5 [45]	33,5 [45]	33,5 [45]	30 [40]	26,5 [36]	24,3 [33]	20,2 [27]
	Int.*	32 [43]	40 [54]	40 [54]	40 [54]	35 [45]	30 [40]	27,5 [37]	26,8 [36]
Max. Pressure Drop bar [PSI]	Cont.	200 [2900]	200 [2900]	200 [2900]	200 [2900]	180 [2600]	160 [2300]	140 [2030]	120 [1740]
	Int.*	240 [3450]	240 [3450]	240 [3450]	240 [3450]	210 [3050]	180 [2600]	160 [2300]	140 [2030]
Max. Oil Flow lpm [GPM]	Cont.	100 [26.5]	125 [33]	125 [33]	125 [33]	125 [33]	125 [33]	125 [33]	125 [33]
	Int.*	125 [33]	150 [40]	150 [40]	150 [40]	150 [40]	150 [40]	150 [40]	150 [40]
Max. Inlet Pressure bar [PSI]	Cont.	210 [3050]	210 [3050]	210 [3050]	210 [3050]	210 [3050]	210 [3050]	210 [3050]	210 [3050]
	Int.*	250 [3600]	250 [3600]	250 [3600]	250 [3600]	250 [3600]	250 [3600]	250 [3600]	250 [3600]
Max. Return Pressure with Drain Line,bar [PSI]	Cont.	140 [2030]	140 [2030]	140 [2030]	140 [2030]	140 [2030]	140 [2030]	140 [2030]	140 [2030]
	Int.*	175 [2540]	175 [2540]	175 [2540]	175 [2540]	175 [2540]	175 [2540]	175 [2540]	175 [2540]
Max. Starting Pressure with Unloaded Shaft, bar [PSI]		10 [150]	10 [150]	10 [150]	10 [150]	10 [150]	10 [150]	10 [150]	10 [150]
Min. Starting Torque daNm [lb-in]	At max. pressure drop Cont.	34 [3010]	43 [3800]	53 [4690]	74 [6550]	84 [7435]	95 [8410]	95 [8410]	95 [8410]
	At max. pressure drop Int.*	41 [3630]	52 [4600]	63 [5580]	89 [7880]	97 [8585]	106 [9380]	110 [9735]	115 [10180]
Min. Speed**, [RPM]		10	9	8	7	6	5	5	5
Static Torque of Brake, daNm [lb-in]		143 [12657]							
Min. Brake Release Pressure***, bar [PSI]		32-35 [464-507]							
Max. Opening Pressure, bar [PSI]		280 [4060]							
Max. Pressure in Drain Line, bar [PSI]		5 [73]							
Weight, kg [lb]		27,5 [60.6]	28 [61.7]	28,5 [62.8]	29,5 [65]	30,5 [67.2]	31,5 [69.4]	31 [68.3]	32 [70.5]

* Intermittent operation: the permissible values may occur for max. 10% of every minute.
** For speeds lower than given, consult factory or your regional manager.
*** Motor-brakes must always have a drain line. The brake release pressure is the difference between the pressure in the brake release line and the pressure in the drain line.

1. Intermittent speed and intermittent pressure must not occur simultaneously.
2. Recommended filtration is per ISO cleanliness code 20/16. A nominal filtration of 25 micron or better.
3. Recommend using a premium quality, anti-wear type mineral based hydraulic oil HLP(DIN51524) or HM (ISO 6743/4). If using synthetic fluids consult the factory for alternative seal materials.
4. Recommended minimum oil viscosity 13 mm^2/s [70 SUS] at 50°C [122°F].
5. Recommended maximum system operating temperature is 82°C [180°F].
6. To assure optimum motor life fill with fluid prior to loading and run at moderate load and speed for 10-15 minutes.

DIMENSIONS and MOUNTING DATA

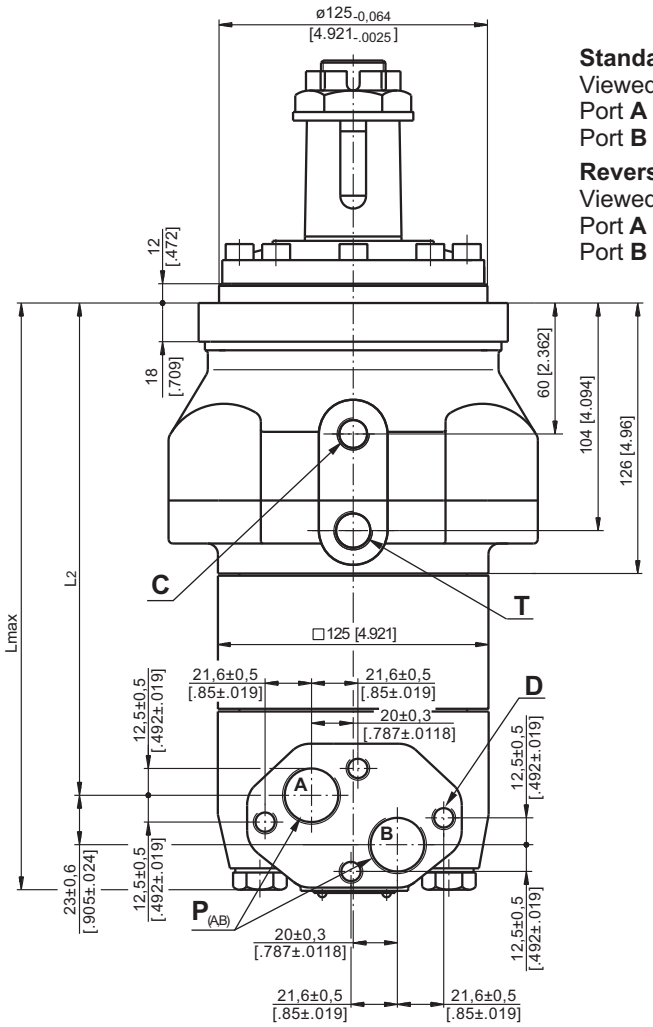

Standard Rotation
Viewed from Shaft End
Port **A** Pressurized - **CW**
Port **B** Pressurized - **CCW**

Reverse Rotation
Viewed from Shaft End
Port **A** Pressurized - **CCW**
Port **B** Pressurized - **CW**

Shaft Dim.
See Page 35

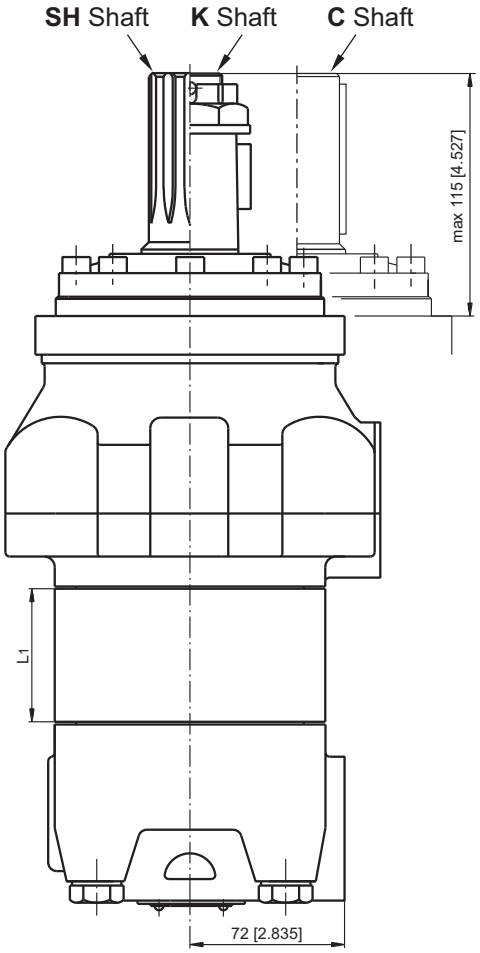

mm [in]

P(A,B) - 2xG3/4, 17 mm [.669] depth
C - Brake release port, G1/4, 12 mm [.472 in] depth
T - Drainage tap, G3/8, 13 mm [.512] depth
D - 4xM10, 10 mm [.394] depth

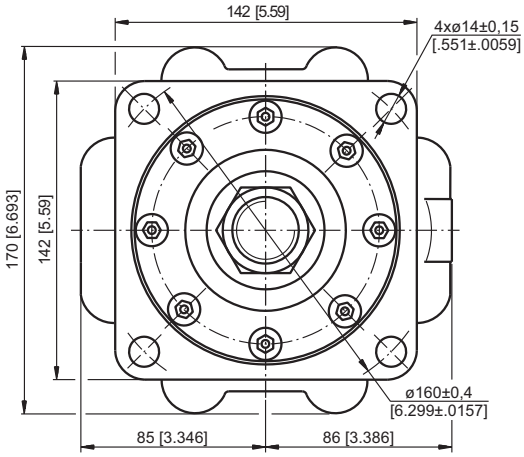

PERMISSIBLE SHAFT LOADS

The curve applies to a B10 bearing life of 3000 hours at 200 RPM.
Max. permissible radial shaft load with a safety factor of 3:1.

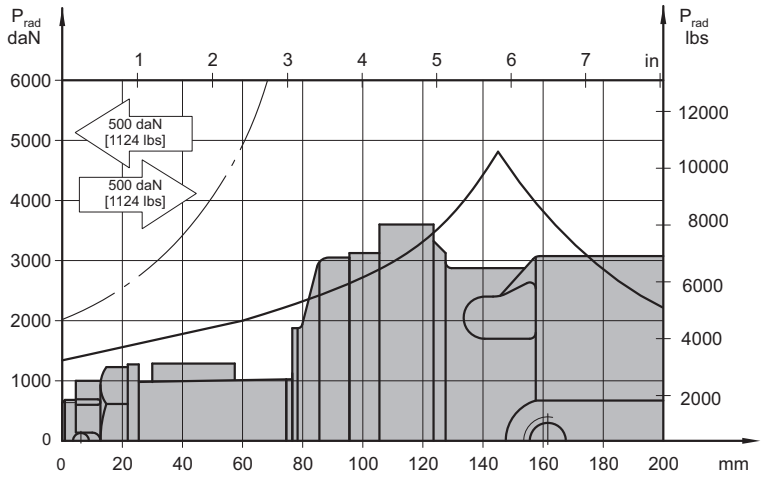

Warning: Drain line should always be used.

Type	*L1, mm [in]	L2, mm [in]	Lmax, mm [in]
MT/B 160	17 [.67]	178 [7.01]	228 [8.98]
MT/B 200	22 [.87]	183 [7.21]	233 [9.17]
MT/B 250	28,3 [1.11]	189,3 [7.45]	239 [9.41]
MT/B 315	37,5 [1.48]	198,5 [7.81]	248 [9.76]
MT/B 400	48 [1.89]	209 [8.23]	259 [10.2]
MT/B 500	62 [2.44]	223 [8.78]	273 [10.8]
MT/B 630	58 [2.28]	219 [8.62]	269 [10.6]
MT/B 725	67 [2.64]	228 [8.98]	278 [10.9]

* The width of the gerotor is 3,5 mm [.138 in] greater than L_1.

SHAFT EXTENSIONS

C -ø40 straight, Parallel key A12x8x70 DIN 6885
Max. Torque 123 daNm [10886 lb-in]

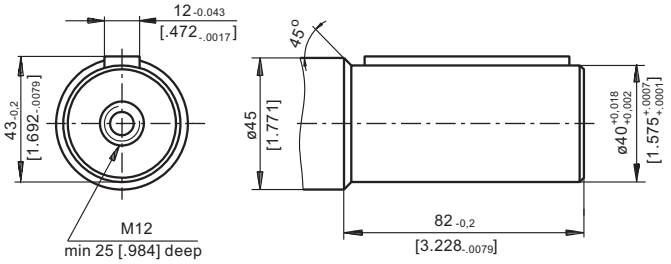

SH -ø1½" splined 17T, DP 12/24 ANSI B92.1-1976
Max. Torque 123 daNm [10886 lb-in]

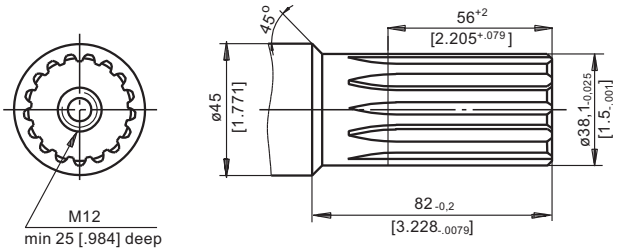

K -tapered 1:10, Parallel key B12x8x28 DIN 6885
Max. Torque 210 daNm [18587 lb-in]

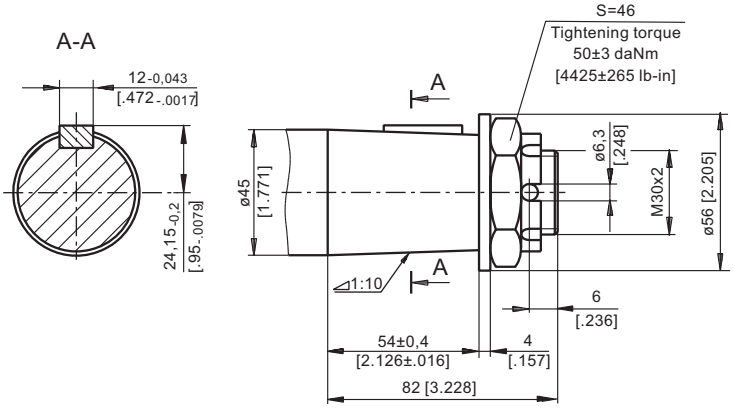

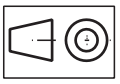

mm [in]

ORDER CODE

	1	2	3	4	5
M T / B					

Pos.1 - Displacement code

160	- 161,1 cm^3/rev [9.83 in^3/rev]
200	- 201,4 cm^3/rev [12.29 in^3/rev]
250	- 251,8 cm^3/rev [15.36 in^3/rev]
315	- 326,3 cm^3/rev [19.90 in^3/rev]
400	- 410,9 cm^3/rev [25.06 in^3/rev]
500	- 523,6 cm^3/rev [31.95 in^3/rev]
630	- 631,2 cm^3/rev [38.50 in^3/rev]
725	- 724,3 cm^3/rev [44.20 in^3/rev]

Pos.2 - Shaft Extensions*

C	- ø40 straight, Parallel key A12x8x70 DIN6885
SH	- ø1½" splined 17 DP12/24 ANS B922.1-76
K	- ø45 tapered 1:10, Parallel key B12x8x28 DIN 6885

Pos.3 - Check Valves

omit - with check valves
1 - without check valves

Pos.4 - Special Features (see page 72)

Pos.5 - Design Series

omit - Factory specified

NOTES:
* The permissible output torque for shafts must not be exceeded!

The motor-brakes are mangano-phosphatized as standard.

HYDRAULIC MOTOR-BRAKE MT/BX

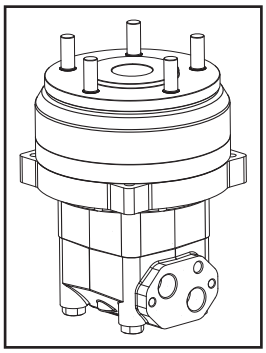

APPLICATION

» Conveyors
» Metal working machines
» Agricultural machines
» Road building machines
» Mining machinery
» Food industries
» Special vehicles
» Plastic and rubber machinery etc.

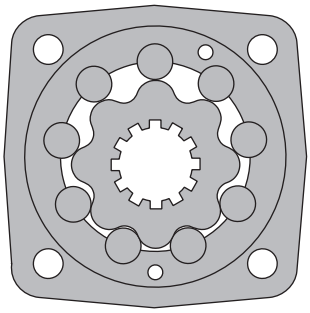

CONTENTS

Specification data 36
Dimensions and mounting 37
Permissible shaft loads 38
Order code 38

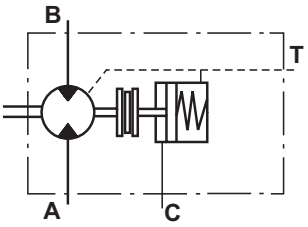

OPTIONS

» Model - Disc valve, roll-gerotor;
» Fully integrated friction disk brake;
» Side ports;
» Shafts - straight, splined and tapered;
» BSPP ports
» Other special features

GENERAL

Max. Displacement, cm^3/rev [in^3/rev]	523,6 [31.95]
Max. Speed, [RPM]	780
Max. Torque, daNm [lb-in]	cont.: 122 [10780] int.: 137 [12125]
Max. Output, kW [HP]	40 [54]
Max. Pressure Drop, bar [PSI]	cont.: 200 [2900] int.: 240 [3450]
Max. Oil Flow, lpm [GPM]	150 [40]
Min. Speed, [RPM]	5
Permissible Shaft Loads, daN [lbs]	P_a=1000 [2248]
Pressure fluid	Mineral based- HLP(DIN 51524) or HM(ISO 6743/4)
Temperature range, °C [°F]	-40÷140 [-40÷284]
Optimal Viscosity range, mm^2/s [SUS]	20÷75 [98÷347]
Filtration	ISO code 20/16 (Min. recommended fluid filtration of 25 microns)

Oil flow in drain line

Pressure drop bar [PSI]	Viscosity mm^2/s [SUS]	Oil flow in drain line lpm [GPM]
140 [2030]	20 [98]	2,5 [.66]
	35 [164]	1,5 [.39]
210 [3045]	20 [98]	5 [1.32]
	35 [164]	3 [.79]

Pressure Losses

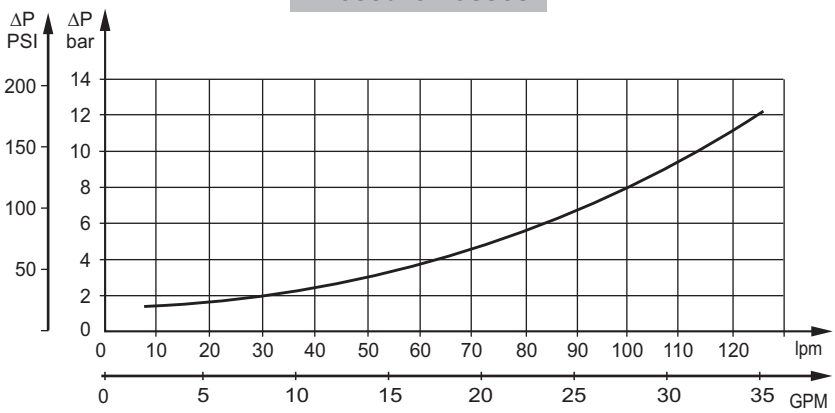

M+S HYDRAULIC

SPECIFICATION DATA

Type		MT/BX 160	MT/BX 200	MT/BX 250	MT/BX 315	MT/BX 400	MT/BX 500
Displacement, cm^3/rev [in^3/rev]		161,1 [9.83]	201,4 [12.29]	251,8 [15.36]	326,3 [19.90]	410,9 [25.06]	523,6 [31.95]
Max. Speed, [RPM]	Cont.	625	625	500	380	305	240
	Int.*	780	750	600	460	365	285
Max. Torque daNm [lb-in]	Cont.	47 [4160]	59 [5220]	73 [6460]	95 [8410]	108 [9560]	122 [10800]
	Int.*	56 [4960]	71 [6285]	88 [7790]	114 [10090]	126 [11150]	137 [12125]
Max. Output kW [HP]	Cont.	26,5 [36]	33,5 [45]	33,5 [45]	33,5 [45]	30 [40]	26,5 [36]
	Int.*	32 [43]	40 [54]	40 [54]	40 [54]	35 [45]	30 [40]
Max. Pressure Drop bar [PSI]	Cont.	200 [2900]	200 [2900]	200 [2900]	200 [2900]	180 [2600]	160 [2300]
	Int.*	240 [3450]	240 [3450]	240 [3450]	240 [3450]	210 [3050]	180 [2600]
Max. Oil Flow lpm [GPM]	Cont.	100 [26.5]	125 [33]	125 [33]	125 [33]	125 [33]	125 [33]
	Int.*	125 [33]	150 [40]	150 [40]	150 [40]	150 [40]	150 [40]
Max. Inlet Pressure bar [PSI]	Cont.	210 [3050]	210 [3050]	210 [3050]	210 [3050]	210 [3050]	210 [3050]
	Int.*	250 [3600]	250 [3600]	250 [3600]	250 [3600]	250 [3600]	250 [3600]
Max. Return Pressure with Drain Line,bar [PSI]	Cont.	140 [2030]	140 [2030]	140 [2030]	140 [2030]	140 [2030]	140 [2030]
	Int.*	175 [2540]	175 [2540]	175 [2540]	175 [2540]	175 [2540]	175 [2540]
Max. Starting Pressure with Unloaded Shaft, bar [PSI]		10 [150]	10 [150]	10 [150]	10 [150]	10 [150]	10 [150]
Min. Starting Torque daNm [lb-in]	At max. press. drop Cont.	34 [3010]	43 [3800]	53 [4690]	74 [6550]	84 [7435]	95 [8410]
	At max. press. drop Int.*	41 [3630]	52 [4600]	63 [5580]	89 [7880]	97 [8585]	106 [9380]
Min. Speed, [RPM]**		10	9	8	7	6	5
Static Torque of Brake, daNm [lb-in]		120 [10620]					
Min. Brake Release Pressure*, bar [PSI]**		12 [174]					
Max. Opening Pressure, bar [PSI]		30 [435]					
Max. Pressure in Drain Line, bar [PSI]		5 [73]					
Max. Pressure in Release Port C, bar [PSI]		75 [1088]					
Weight, kg [lb]	MT/BX A...	32,8 [72.3]	33,3 [73.4]	34,0 [74.9]	35,0 [77.2]	36,3 [80.0]	37,6 [82.9]
	MT/BX B...	32,2 [70.9]	32,8 [72.3]	33,5 [73.9]	34,5 [76.1]	35,8 [78.9]	37,1 [81.8]

* Intermittierent operation: the permissible values may occur for max. 10% of every minute.
** For speeds lower than given, consult factory or your regional manager.
*** Motor-brakes must always have a drain line. The brake release pressure is the difference between the pressure in the brake release line and the pressure in the drain line.

1. Intermittent speed and intermittent pressure must not occur simultaneously.
2. Recommended filtration is per ISO cleanliness code 20/16. A nominal filtration of 25 micron or better.
3. Recommend using a premium quality, anti-wear type mineral based hydraulic oil HLP(DIN51524) or HM (ISO 6743/4). If using synthetic fluids consult the factory for alternative seal materials.
4. Recommended minimum oil viscosity 13 mm^2/s [70 SUS] at 50°C [122°F].
5. Recommended maximum system operating temperature is 82°C [180°F].
6. To assure optimum motor life fill with fluid prior to loading and run at moderate load and speed for 10-15 minutes.

DIMENSIONS and MOUNTING DATA

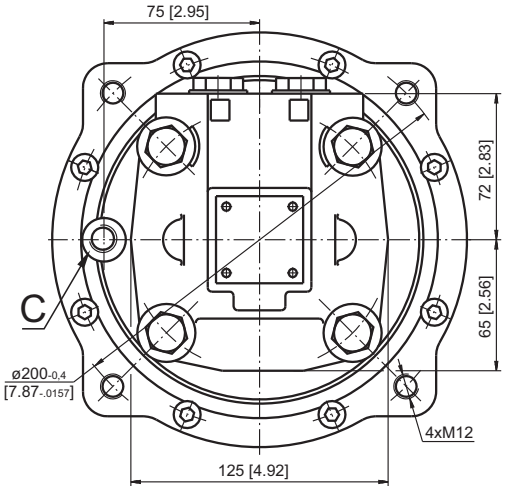

Type	L_1,mm [in]	L_2,mm [in]	L_3,mm [in]	*L_4,mm [in]
MT/BX 160	227 [8.937]	228 [8.976]	62,5 [2.461]	16,5 [.649]
MT/BX 200	232 [9.134]	233 [9.173]	67,5 [2.657]	21,5 [.846]
MT/BX 250	238 [9.370]	239 [9.409]	73,8 [2.906]	27,8 [1.094]
MT/BX 315	247 [9.724]	248 [9.764]	83,0 [3.268]	37,0 [1.457]
MT/BX 400	258 [10.157]	259 [10.197]	93,5 [3.681]	47,5 [1.870]
MT/BX 500	272 [10.709]	273 [10.748]	107,5 [4.232]	61,5 [2.421]

* The width of the gerolor is 3,5 mm greater than L4.

mm [in]

A Wheel bolt flange

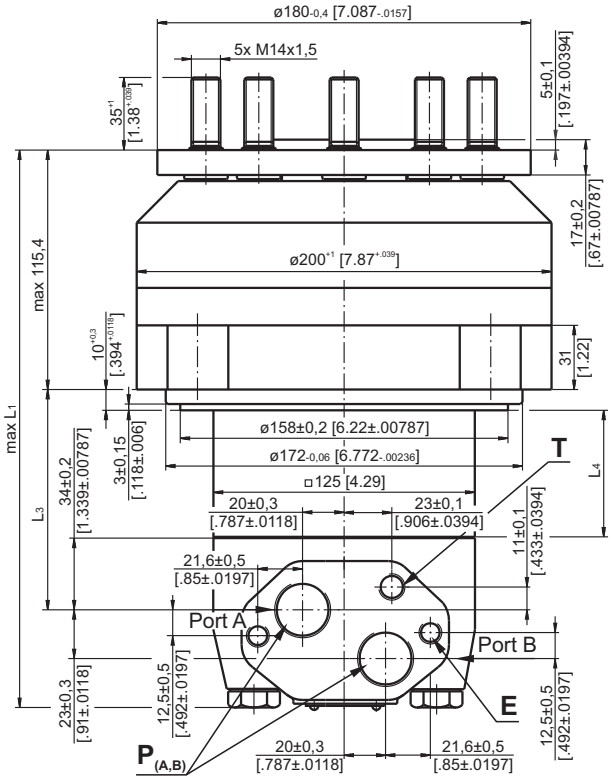

B Threaded hole flange

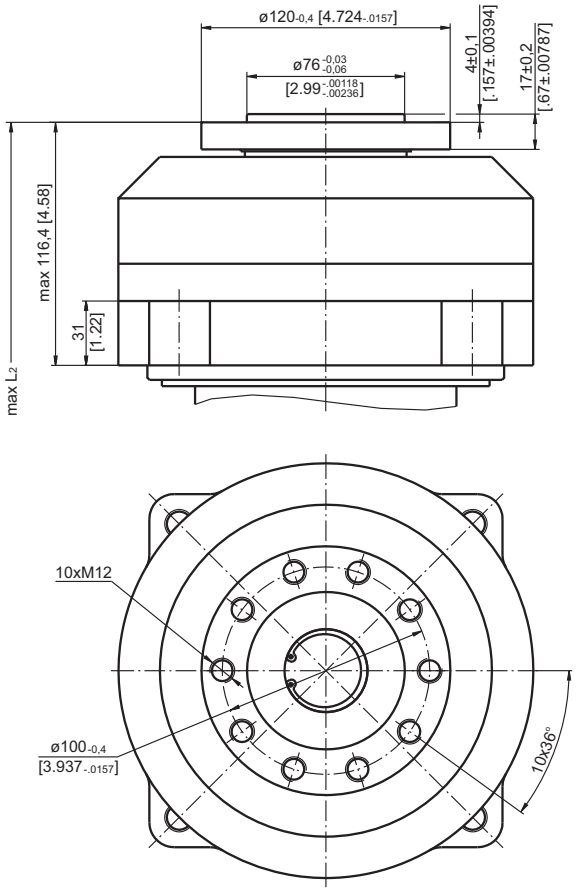

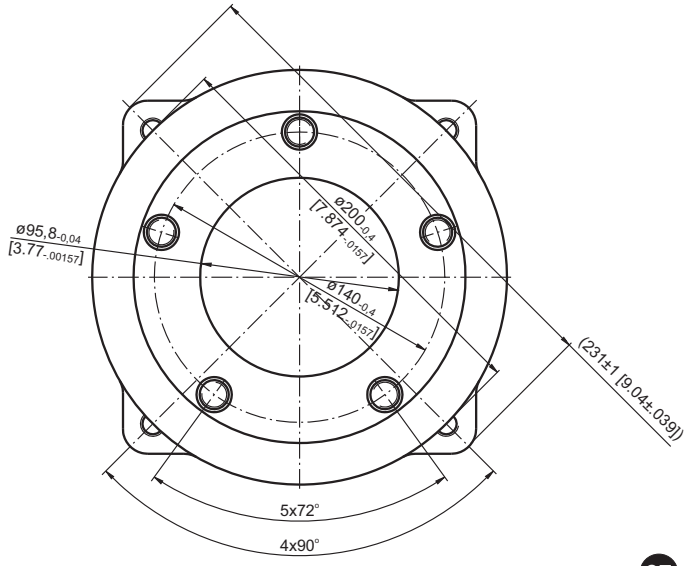

	Versions	
	2	4
$P_{(A,B)}$	2xG3/4	2x1 1/16-12 UN
T - Drainage tap	G1/4	9/16-18 UNF
C - Brake release port	G1/4	9/16-18 UNF
E	2xM10	2xM10

Standard Rotation
Viewed from Shaft End
Port **A** Pressurized - **CW**
Port **B** Pressurized - **CCW**

Reverse Rotation
Viewed from Shaft End
Port **A** Pressurized - **CCW**
Port **B** Pressurized - **CW**

PERMISSIBLE SHAFT LOADS

The load diagram is valid for an average bearings life of 3000 hours at 50 RPM
A - Permissible radial shaft load.
B - Max. radial shaft load. Any shaft load exceeding the values shown in the curve will involve a risk of breakage

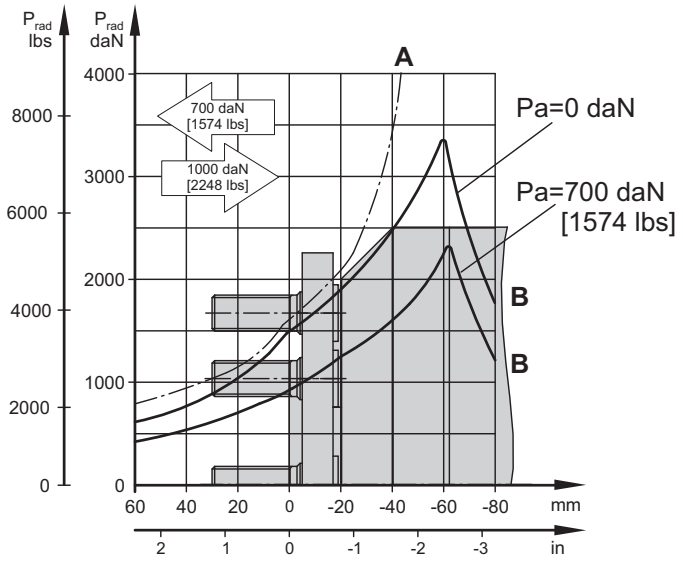

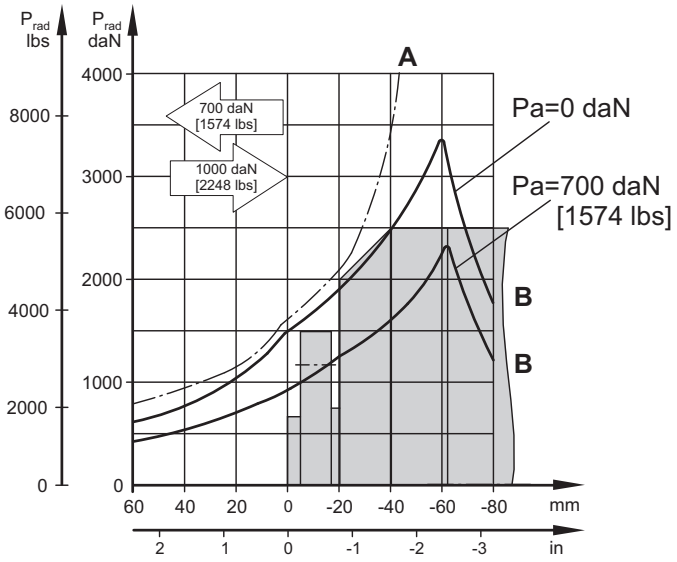

Warning: Drain line should always be used.

MAX. PERMISSIBLE SHAFT SEAL PRESSURE

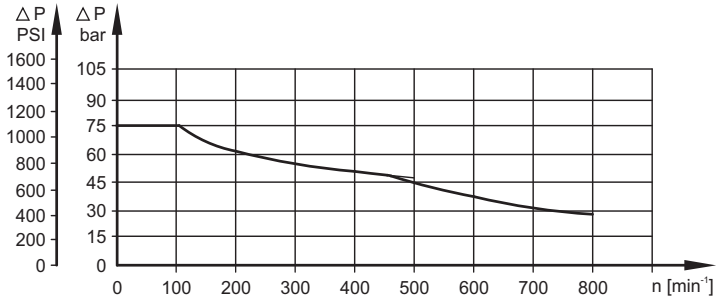

ORDER CODE

	1	2	3	4	5
M T / B X					

Pos.1 - Flange type

A	- Wheel bolt flange 5xM14 on ø180
B	- Threaded hole flange 10xM12 on ø120

Pos.2 - Displacement code

160	- 161,1 cm^3/rev [9.83 in^3/rev]
200	- 201,4 cm^3/rev [12.29 in^3/rev]
250	- 251,8 cm^3/rev [15.36 in^3/rev]
315	- 326,3 cm^3/rev [19.90 in^3/rev]
400	- 410,9 cm^3/rev [25.06 in^3/rev]
500	- 523,6 cm^3/rev [31.95 in^3/rev]

Pos.3 - Port Size/Type [standard manifold to each]

2	- side ports, 2xG3/4, G1/4, BSP thread, ISO 228
4	- side ports, 2x1 1/16-12 UN, O-ring, 9/16-18 INF

Pos.4 - Special Features (see page 72)

Pos.5 - Design Series

omit - Factory specified

NOTES:
* Color at customer's request.

The motor-brakes are mangano-phosphatized as standard.

HYDRAULIC MOTOR-BRAKE MTM/B

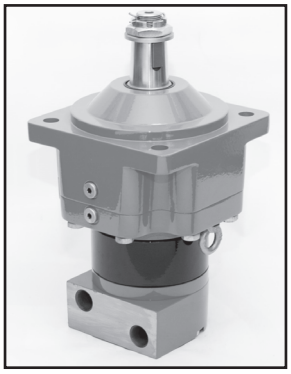

APPLICATION

» Skid Steer Loaders
» Metal working machines
» Trenchers
» Augers
» Agricultural machines
» Road building machines
» Special vehicles
» Mine machines
» Woodworking and sawmill machinery
» Conveyors etc.

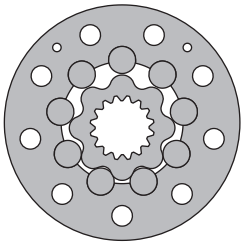

CONTENTS

Specification data 40
Dimensions and mounting ... 41÷42
Shaft extensions 43
Permissible shaft loads 44
Order code 45

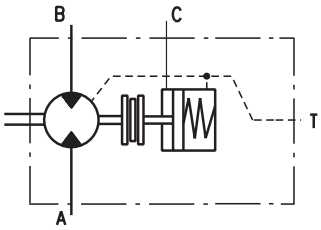

OPTIONS

» Model - Disc valve, roll-gerotor;
» Fully integrated friction disk brake;
» Side ports;
» Shafts - straight, splined and tapered;
» BSPP ports
» Other special features

GENERAL

Max. Displacement, cm^3/rev [in^3/rev]	724,3 [44.2]
Max. Speed, [RPM]	750
Max. Torque, daNm [in-lb]	cont.: 175 [15490] int.: 215 [16030]
Max. Output, kW [HP]	70 [94]
Max. Pressure Drop, bar [PSI]	cont.: 250 [3600] int.: 350 [5080]
Max. Oil Flow, lpm [GPM]	150 [40]
Permissible Shaft Loads daN [lbs]	P_a=1000 [2250]
Pressure fluid	Mineral based- HLP(DIN 51524) or HM(ISO 6743/4)
Temperature range, ^oC [^oF]	-40÷140 [-40÷284]
Optimal Viscosity range, mm^2/s [SUS]	20÷75 [98÷347]
Filtration	ISO code 20/16 (Min. recommended fluid filtration of 25 microns)

Oil flow in drain line

Pressure drop bar [PSI]	Viscosity mm^2/s [SUS]	Oil flow in drain line lpm [GPM]
200 [2900]	20 [98]	2,5 [.660]
	35 [164]	1,5 [.400]
275 [3990]	20 [98]	4 [1.057]
	35 [164]	2,5 [.660]

Pressure Losses

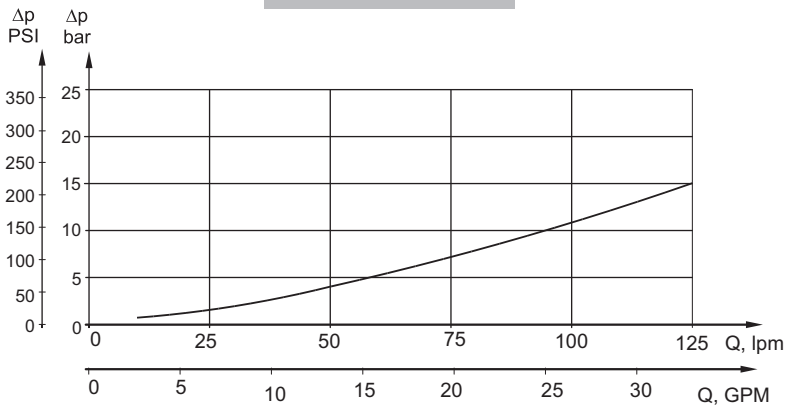

SPECIFICATION DATA

Type		MTM/B 200	MTM/B 250	MTM/B 315	MTM/B 400	MTM/B 470	MTM/B 500	MTM/B 630	MTM/B 725
Displacement, cm^3/rev [in^3/rev]		201,4 [12.29]	251,8 [15.36]	326,3 [19.9]	410,9 [25.06]	475 [28.97]	494,9 [30.17]	631,2 [38.5]	724 [44.2]
Max. Speed, [RPM]	Cont.	625	500	380	305	260	250	196	170
		750	600	460	365	315	300	235	215
Max. Torque, daNm [lb-in]	Cont.	72 [6375]	90 [7965]	116 [10265]	147 [13010]	171 [15135]	172 [15225]	175 [15490]	160 [14160]
	Int.*	102 [9030]	128 [11330]	163 [14425]	206 [18232]	215 [16030]	215 [16030]	215 [16030]	192 [17000]
	Peak**	115 [10180]	144 [12745]	186 [16460]	235 [20800]	240 [21240]	240 [21240]	255 [22570]	240 [21240]
Max. Output, kW [HP]	Cont.	41 [55]	41 [55]	41 [55]	41 [55]	41 [55]	37,5 [50]	29 [39]	26 [35]
	Int.*	65 [87]	70 [94]	70 [94]	70 [94]	55 [74]	51 [68]	45 [60]	40 [54]
Max. Pressure Drop, bar [PSI]	Cont.	250 [3600]	250 [3600]	250 [3600]	250 [3600]	250 [3600]	230 [3340]	185 [2680]	160 [2320]
	Int.*	350 [5080]	350 [5080]	350 [5080]	350 [5080]	315 [4570]	280 [4060]	225 [3260]	210 [3045]
	Peak**	400 [5800]	400 [5800]	400 [5800]	400 [5800]	350 [5080]	320 [4640]	270 [3985]	260 [3770]
Max. Inlet Pressure, bar [PSI]	Cont.	270 [3920]	270 [3920]	270 [3920]	270 [3920]	270 [3920]	270 [3920]	270 [3920]	270 [3920]
	Int.*	370 [5370]	370 [5370]	370 [5370]	370 [5370]	370 [5370]	370 [5370]	370 [5370]	370 [5370]
	Peak**	420 [6100]	420 [6100]	420 [6100]	420 [6100]	420 [6100]	420 [6100]	420 [6100]	420 [6100]
Max. Oil Flow, lpm [GPM]	Cont.	125 [33]	125 [33]	125 [33]	125 [33]	125 [33]	125 [33]	125 [33]	125 [33]
	Int.*	150 [40]	150 [40]	150 [40]	150 [40]	150 [40]	150 [40]	150 [40]	150 [40]
Max. Starting Pressure with Unloaded Shaft, bar [PSI]		6 [87]	6 [87]	6 [87]	6 [87]	6 [87]	6 [87]	6 [87]	6 [87]
Min. Starting Torque, daNm [lb-in]		60 [5310]	75 [6640]	97 [8585]	122 [10800]	142 [12570]	143 [12655]	144 [12745]	148 [13100]
Static Torque of Brake, daNm [lb-in]		200 [17700]							
Min. Brake Release Pressure***, bar [PSI]		14 [203]							
Full Opening Pressure, bar [PSI]		40 [580]							
Max. Pressure in Release Port C, bar [PSI]		120 [1740]							
Weight, kg [lb]		37,5 [82.7]	37,9 [83.6]	39,1 [86.2]	41,3 [91.1]	44,1 [97.2]	46,0 [101.4]	49,1 [108.2]	52,0 [114.6]

* Intermittent operation: the permissible values may occur for max. 10% of every minute.
** Peak load: the permissible values may occur for max. 1% of every minute.
*** Motor-brakes must always have a drain line. The brake release pressure is the difference between the pressure in the brake release line and the pressure in the drain line.

1. Intermittent speed and intermittent pressure must not occur simultaneously.
2. Recommended filtration is per ISO cleanliness code 20/16. A nominal filtration of 25 micron or better.
3. Recommend using a premium quality, anti-wear type mineral based hydraulic oil HLP(DIN51524) or HM (ISO 6743/4). If using synthetic fluids consult the factory for alternative seal materials.
4. Recommended minimum oil viscosity 13 mm²/s [70 SUS] at 50°C [122°F].
5. Recommended maximum system operating temperature is 82°C [180°F].
6. To assure optimum motor life fill with fluid prior to loading and run at moderate load and speed for 10-15 minutes.

DIMENSIONS and MOUNTING DATA - MTM/B D

D - Bolt flange 4xø18.5 mm
spigot diameter 7.086 in [ø180 mm]

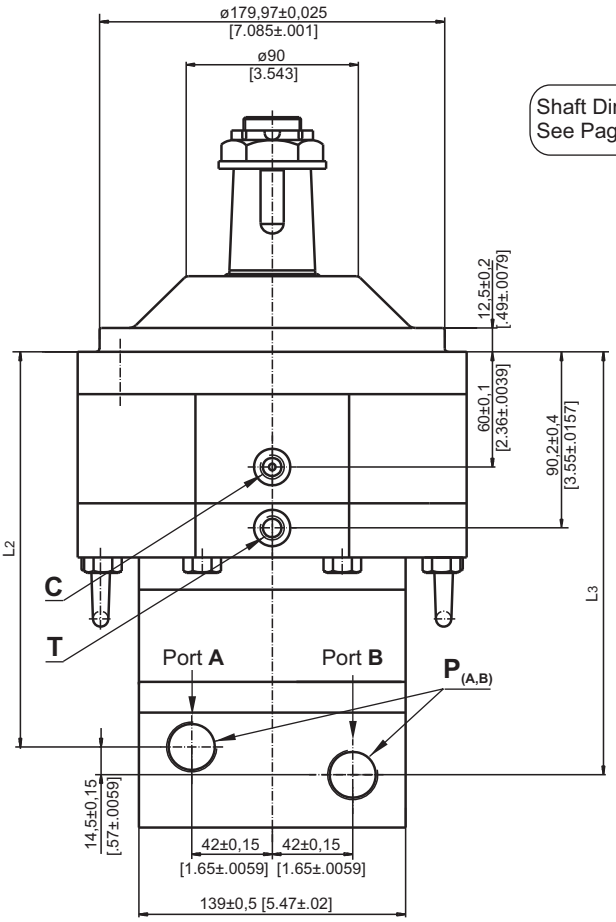

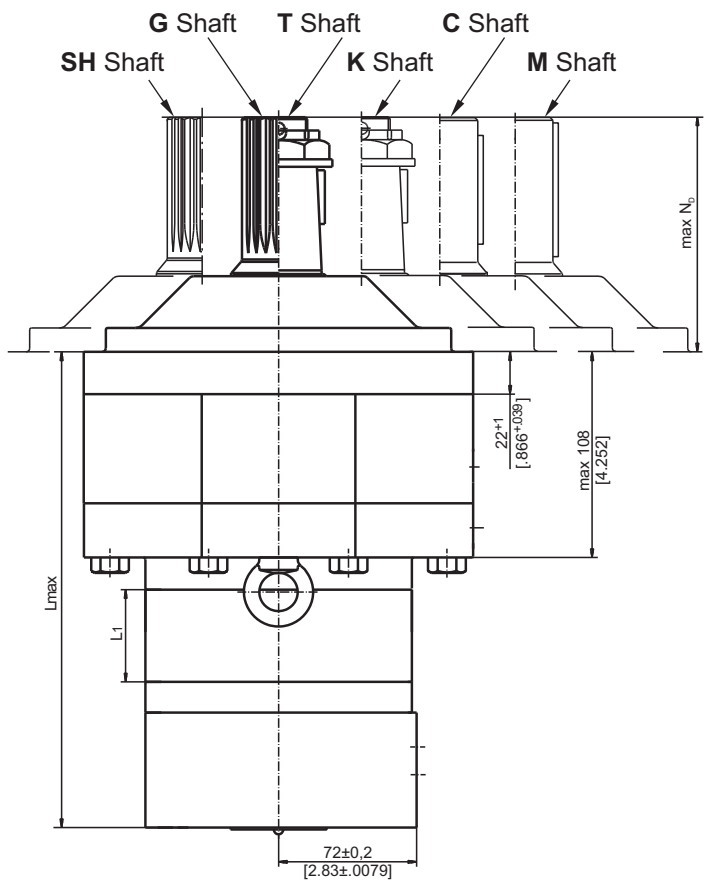

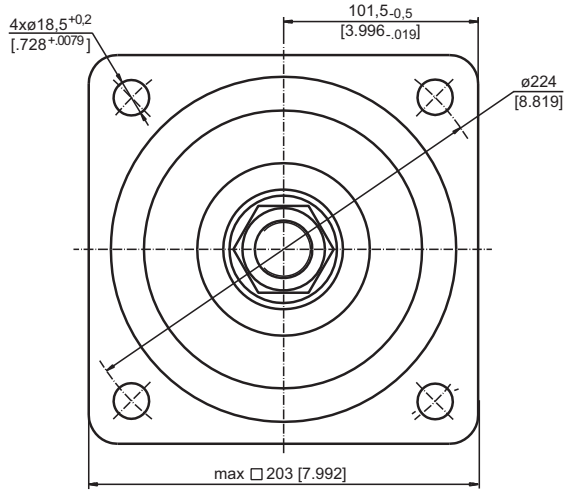

Standard Rotation
Viewed from Shaft End
Port **A** Pressurized - **CW**
Port **B** Pressurized - **CCW**

Reverse Rotation
Viewed from Shaft End
Port **A** Pressurized - **CCW**
Port **B** Pressurized - **CW**

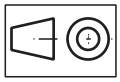

mm [in]

Type	L, mm [in]	L_2, mm [in]	L_3, mm [in]	L_1, mm [in]
MTM/B D 200	226 [8.90]	184 [7.24]	198,5 [7.86]	25 [.98]
MTM/B D 250	232,5 [9.15]	190 [7.48]	204,5 [8.05]	31,3 [1.23]
MTM/B D 315	241,5 [9.51]	199,5 [7.85]	214 [8.43]	40,5 [1.59]
MTM/B D 400	252 [9.92]	210 [8.27]	224,5 [8.84]	51 [2.01]
MTM/B D 470	260 [10.24]	218 [8.58]	232,5 [9.15]	59 [2.32]
MTM/B D 500	249 [9.80]	207 [8.15]	221,5 [8.72]	48 [1.89]
MTM/B D 630	262 [10.32]	220 [8.66]	234,5 [9.23]	61 [2.40]
MTM/B D 725	271 [10.67]	229 [9.02]	243,5 [9.59]	70 [2.76]

Note: For N_D see page 39

C : Brake release port
T : Drainage tap

	Versions	
	2	4
P (A,B)	2xG¾	2x1 1/16-12UN
T	G¼	9/16-18UNF
C	G¼	7/16-20 UNF

DIMENSIONS and MOUNTING DATA MTM/B C and MTM/B AC

C - Thread hole flange 4xM16
spigot diameter 125 mm [4.921 in]

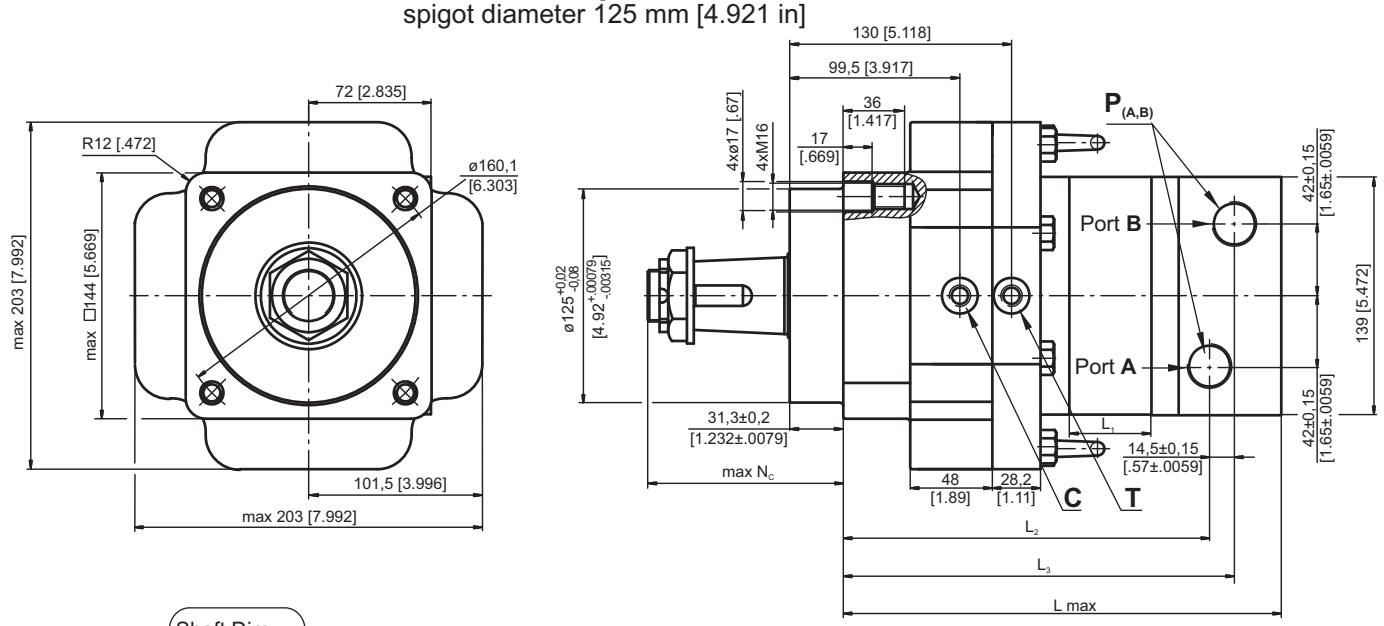

Shaft Dim.
See Page 39

AC - Thread hole flange 4x5/8-18 UNF
spigot diameter 127 mm [5.0 in]

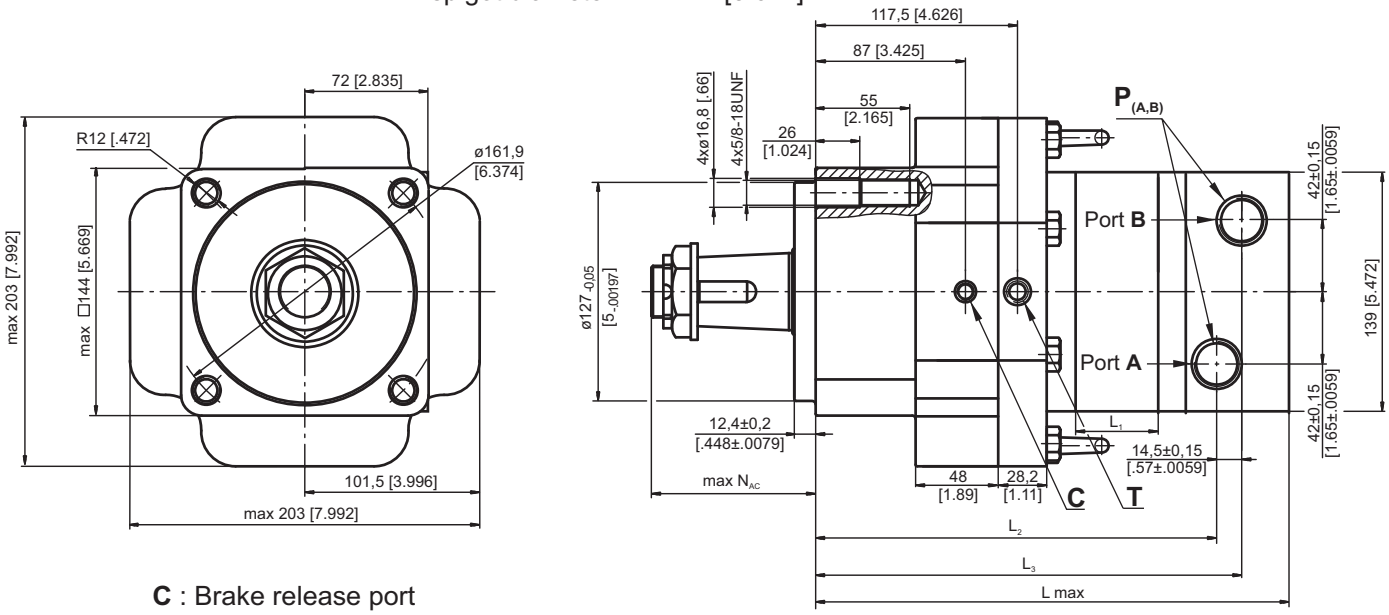

C : Brake release port
T : Drainage tap

	Versions	
	2	4
P (A,B)	2xG¾	2x1 1/16-12UN
T	G¼	9/16 -18UNF
C	G¼	7/16 -20 UNF

Note: For N_C and N_{AC} see page 39

Standard Rotation
Viewed from Shaft End
Port **A** Pressurized - **CW**
Port **B** Pressurized - **CCW**

Reverse Rotation
Viewed from Shaft End
Port **A** Pressurized - **CCW**
Port **B** Pressurized - **CW**

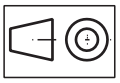

mm [in]

Type	L, mm [in]	L2, mm [in]	L3, mm [in]	Type	L, mm [in]	L2, mm [in]	L3, mm [in]	L1, mm [in]
MTM/B C 200	233 [9.17]	191 [7.92]	205,5 [8.09]	MTM/B AC 200	252 [9.92]	210 [8.27]	224,5 [8.84]	25 [.98]
MTM/B C 250	239,3 [9.42]	197,3 [7.77]	211,8 [8.34]	MTM/B AC 250	258,5 [10.18]	216,5 [8.25]	231 [9.09]	31,3 [1.23]
MTM/B C 315	248,5 [9.48]	206,5 [8.13]	221 [8.70]	MTM/B AC 315	267,5 [10.53]	225,5 [8.88]	240 [9.45]	40,5 [1.59]
MTM/B C 400	259 [10.19]	217 [8.54]	231,5 [9.11]	MTM/B AC 400	278 [10.94]	236 [9.29]	250,5 [9.186]	51 [2.01]
MTM/B C 470	267 [10.51]	225 [8.86]	239,5 [9.43]	MTM/B AC 470	286 [11.26]	244 [9.61]	258,5 [10.18]	59 [2.32]
MTM/B C 500	256 [10.08]	214 [8.43]	228,5 [8.99]	MTM/B AC 500	275 [10.83]	233 [9.17]	247,5 [9.74]	48 [1.89]
MTM/B C 630	269 [10.59]	227 [8.94]	241,5 [9.51]	MTM/B AC 630	288 [11.34]	246 [9.68]	260,5 [10.26]	61 [2.40]
MTM/B C 725	278 [10.94]	236 [9.29]	250,5 [9.86]	MTM/B AC 725	297 [11.69]	255 [10.04]	269,5 [10.61]	70 [2.76]

SHAFT EXTENSIONS

C

1½"[38,1] srtaight, Parallel key ⅜"x ⅜"x 2¼" BS46
Max. Torque 133 daNm [11770 lb-in]

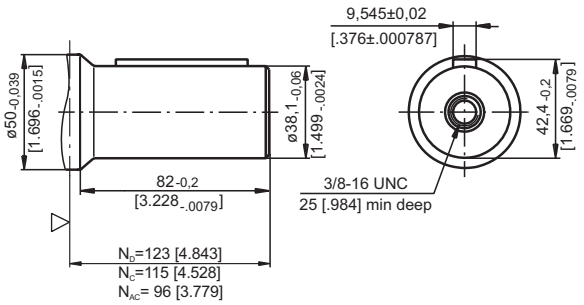

M

ø40 srtaight, Parallel key A12x8x70
Max. Torque 133 daNm [11770 lb-in]

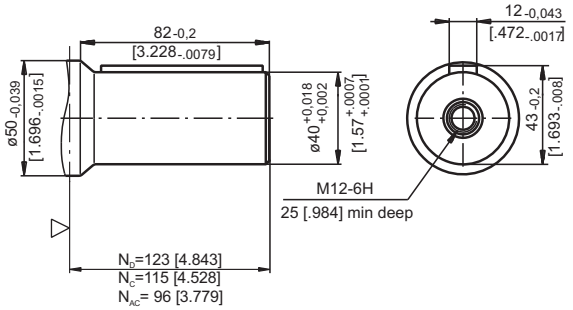

G

17T Splined, 1½" [38,1] ANS B92.1-1976
Max. Torque 210 daNm [18580 lb-in]

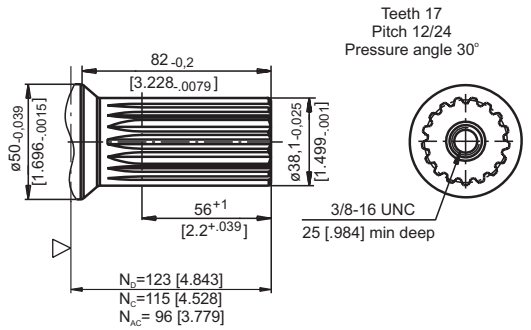

T

1¾" [44,5] SAE J501 Tapered 1:8
Parallel key 7⁄16"x 1¼ " BS46
Max. Torque 210 daNm [18580 lb-in]

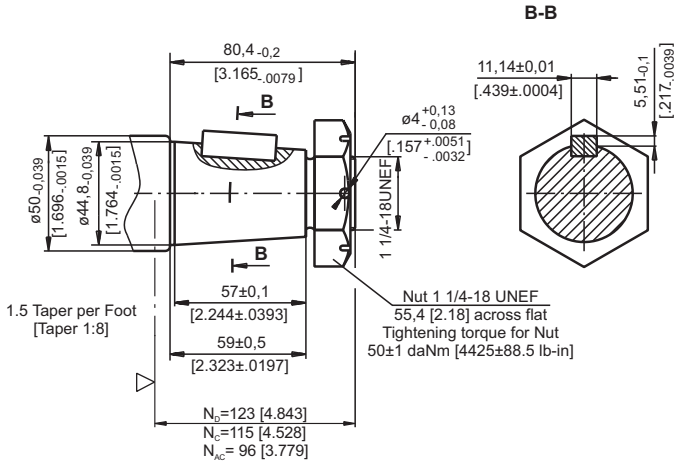

SH

17T Splined, 1½" [38,1] ANS B92.1-1976
Max. Torque 210 daNm [18580 lb-in]

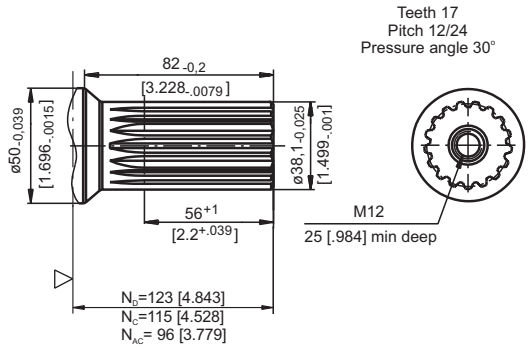

K

ø45 Tapered 1:10
Parallel key 12x8x28 DIN 6885
Max. Torque 210 daNm [18580 lb-in]

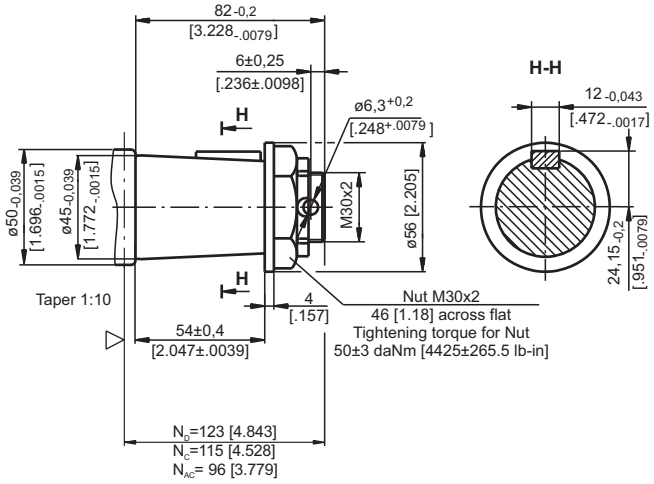

▽ - Motor Mounting Surface

N_D - for **D** flange
N_C - for **C** flange
N_{AC} - for **AC** flange

mm [in]

PERMISSIBLE RADIAL SHAFT LOADS

MTM/B D...

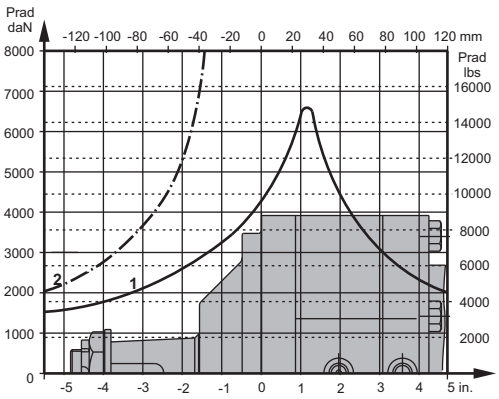

MTM/B C...

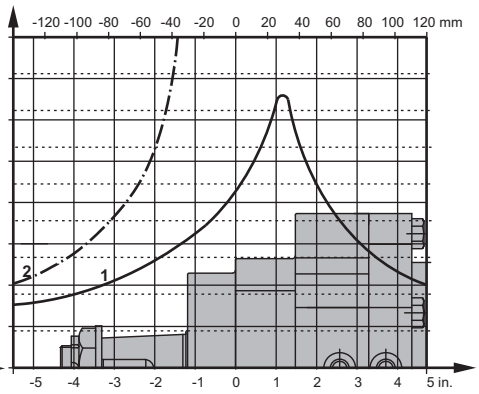

MTM/B AC...

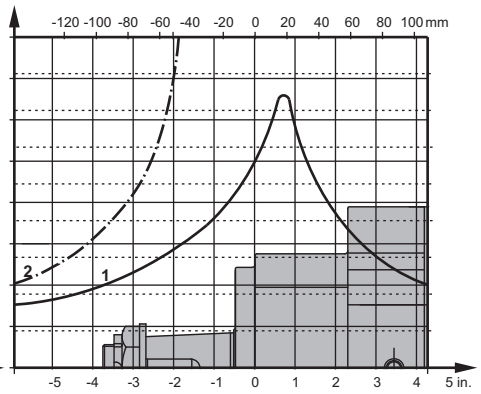

1 - Bearing curve: The curve applies to a B10 bearing life of 2000 hours at 100 RPM.

2 - Shaft curve: The curve represents Max. permissible radial shaft load with safety factor 2:1.

MAX. PERMISSIBLE SHAFT SEAL PRESSURE

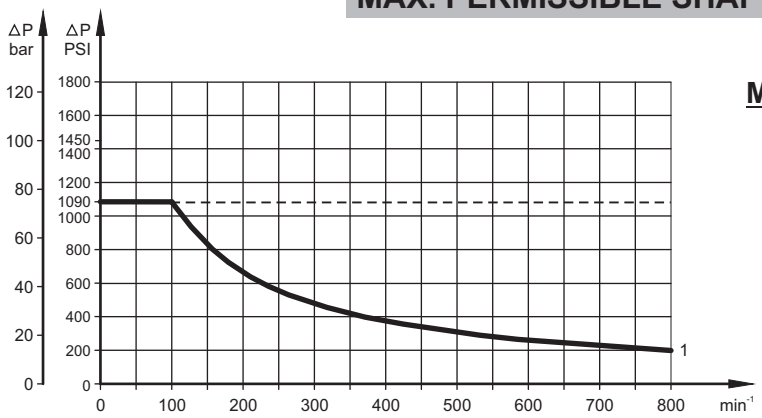

Max. return pressure without drain line or max. pressure in the drain line

1: Drawing for Standard Shaft Seal

——— - continuous operations

- - - - - - intermittent operations

ORDER CODE

	1	2	3	4	5	6
M T M / B						

Pos.1 - Mounting Flange

AC	- Flange 4x5/8-18 UNC, spigot dia. ø127 mm [5 in]
C	- Flange 4xM16, spigot dia. ø125 mm [4.92 in]
D	- Flange 4xø18,5 [.73], spigot dia. ø180 mm [7.09 in]

Pos.2 - Displacement code

200	- 201,4 cm^3/rev [12.29 in^3/rev]
250	- 251,8 cm^3/rev [15.36 in^3/rev]
315	- 326,3 cm^3/rev [19.90 in^3/rev]
400	- 410,9 cm^3/rev [25.06 in^3/rev]
470	- 475,0 cm^3/rev [28.97 in^3/rev]
500	- 523,6 cm^3/rev [31.95 in^3/rev]
630	- 631,2 cm^3/rev [38.52 in^3/rev]
725	- 724,3 cm^3/rev [44.20 in^3/rev]

Pos.3 - Shaft Extensions*

C	- 1½" [38,1] straight, Parallel key 3/8x3/8x2 1/4"
G	- 1½" [38,1] 17T Splined (3/8-16 UNC)
M	- 40 mm straight, Parallel key 12x8x70
T	- 1:8 Tapered, Parallel key 7/16x7/16x1 1/4"
SH	- 1½" [38,1] 17T Splined (M12)
K	- 1:10 Tapered, Parallel key 12x8x28

Pos.4 - Port Size/Type

2	- side ports, 2xG 3/4, G1/4, BSP thread, ISO 228
4	- side ports, 2x$1^1/_{16}$-12 UN, O-ring, $^9/_{16}$-18 UNF, 7/16-20UNF

Pos.5 - Special Features

HD	- Reinforced motor **HD**** (always)

For Other **Special Features** see page 72

Pos.6 - Design Series

omit - Factory specified

Notes: * The permissible output torque for shafts must not be exceeded!
** The drain line must always be opened!

The motor-brakes are mangano-phosphatized as standard.

HYDRAULIC MOTOR-BRAKES SW500B350V

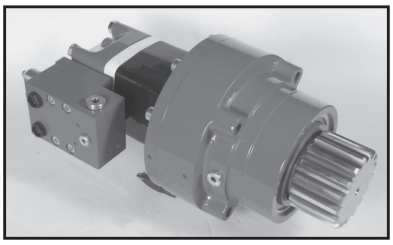

APPLICATION

» Wheel drives
» Conveyors
» Rotators
» Positioners
» Winches
» Swing drives
» Door openers

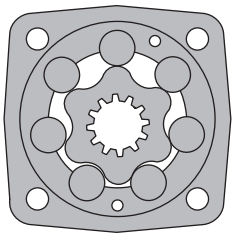

CONTENTS

Specification data 45
Dimensions and mounting 46
Permissible shaft loads 46
Function diagrams 47
Order code 47

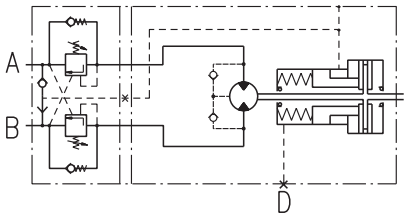

SPECIFICATION DATA

Type		SW500B350V
Displacement, cm³/rev [in³/rev]		475,3 [29]
Max. Speed, RPM	Cont.	16
	Int.*	25
Max. Torque, daNm [lb-in]	Cont.	82 [7260]
	Int.*	95 [8420]
Max. Output, kW [HP]	Cont.	0,9 [1.3]
	Int.*	2,4 [3.3]
Max. Pressure Drop, bar [PSI]	Cont.	125 [1800]
	Int.*	145 [2100]
Max. Oil Flow, lpm [GPM]	Cont.	8 [2]
	Int.*	12 [3]
Max. Return Pressure without Drain Line or Max. Pressure in Drain Line, bar [PSI]		100 [1450]
Min. Starting Torque, daNm [lb-in]	At max. press. drop Cont.	72 [6400]
	At max. press. drop Int.*	75 [6650]
Min. Speed, RPM**		5
Static Torque for the Brake*, daNm [lb-in]**		164 [14 515]
Release Pressure ±10%, bar [PSI]	initial	25...28 [363...406]
	full	31 [449.6]
Max. Steering Pressure, bar [PSI]		245 [3553]
Max. Pressure in Drain Space for the Brake, bar [PSI]		0,5 [7]
Pilot Ratio for the Valve		4,25:1

* Intermittent operation: the permissible values may occur for max. 10% of every minute.
** For speeds of 5 RPM lower than given, consult factory or your regional manager.
*** Static torque is obtained at working pressure - 0 PSI [0 bar].

Space is filled with 125±20 cm³ [7.63±1.22 in³] mineral oil HLP (DIN 51524) or HM (ISO 6743/4).

DIMENSIONS and MOUNTING

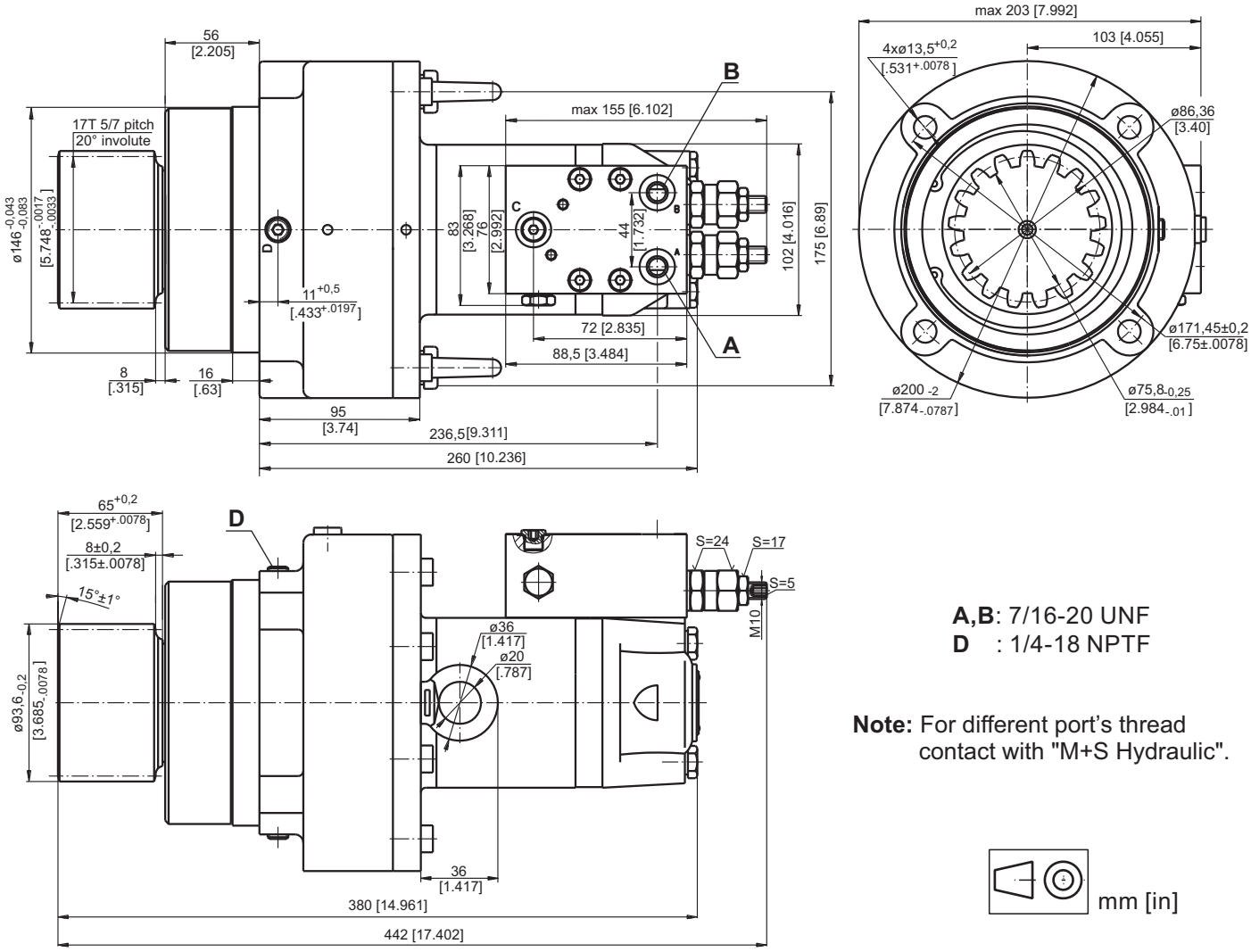

A,B: 7/16-20 UNF
D : 1/4-18 NPTF

Note: For different port's thread contact with "M+S Hydraulic".

mm [in]

PERMISSIBLE SHAFT LOADS

The curve applies to a B10 bearing life of 3000 hours at 40 RPM.

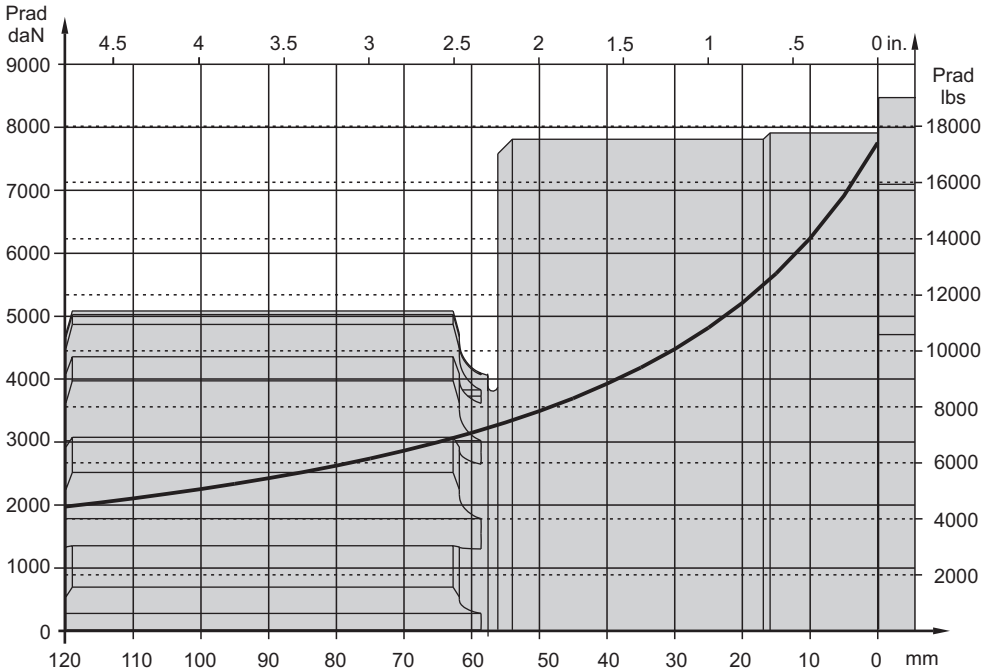

FUNCTION DIAGRAMS

SW 500

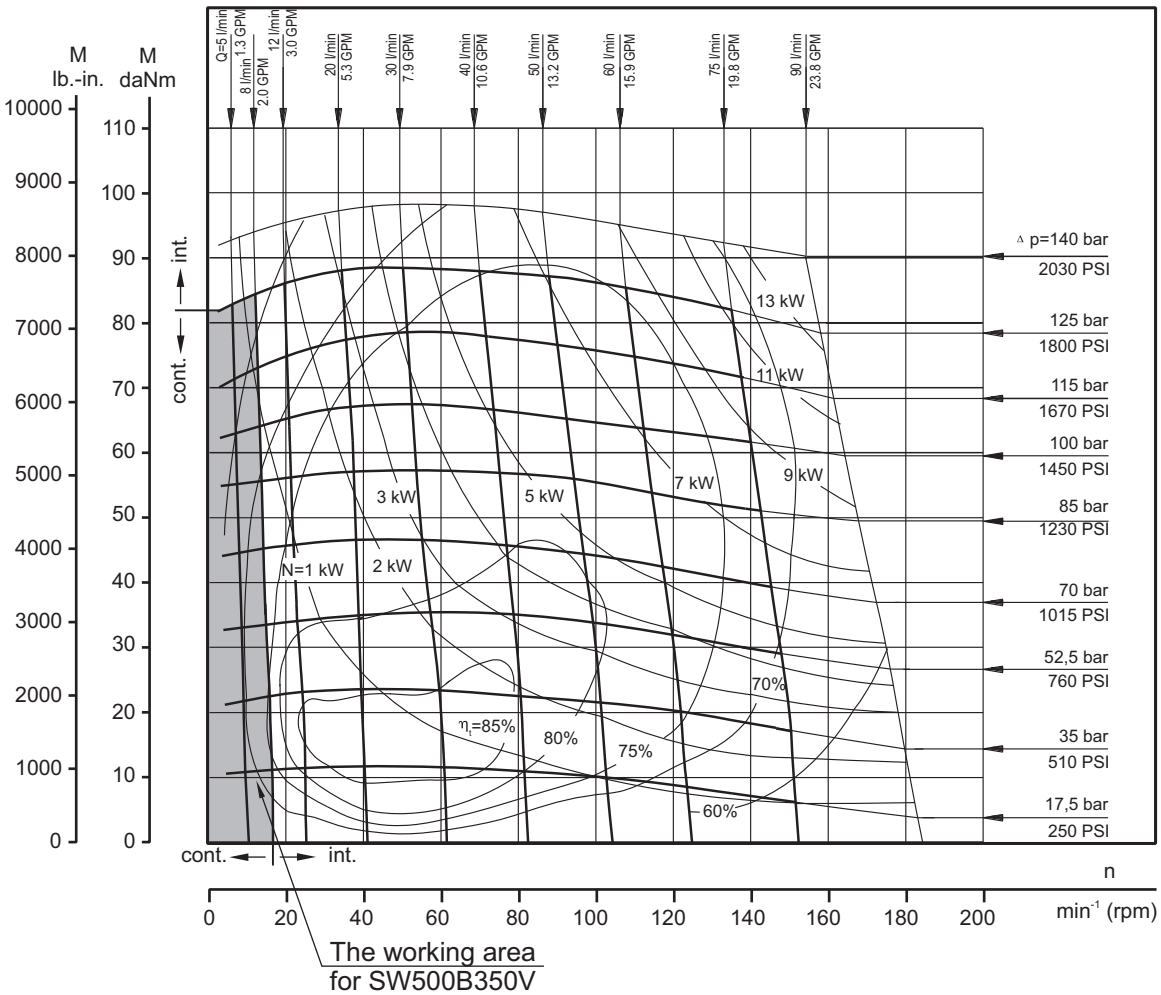

ORDER CODE

1		2	3	4	5	6	7	8
S	W	500	B	350		V		

Pos.1 - Type

S - Motor MLHS

Pos.2 - Displacement code

Pos.3 - Brake

Pos.4 - Brake Type

Pos.5 - Shaft Extension

omit - 17T PITCH splined

Pos.6 - Valve

Pos.7 - Special Features (see page 72)

Pos.8 - Design Series

omit - Factory specified

The motor-brakes are mangano-phosphatized as standard.

HYDRAULIC MOTOR-BRAKES TW500B350...V

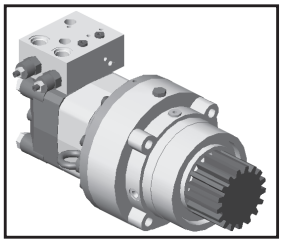

APPLICATION

» Wheel drives
» Conveyors
» Rotators
» Positioners
» Winches
» Swing drives
» Door openers

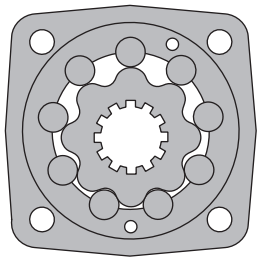

CONTENTS

Specification data 48
Dimensions and mounting 49
Function diagrams 49
Order code 50

Motor-Brake
Type **TW500B350V**

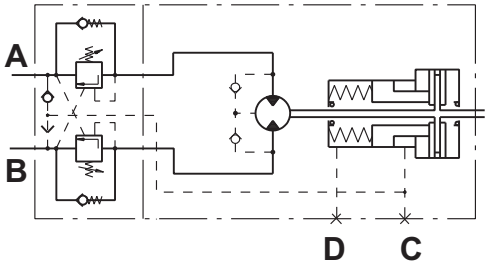

Motor-Brake
Type **TW500B350CV**

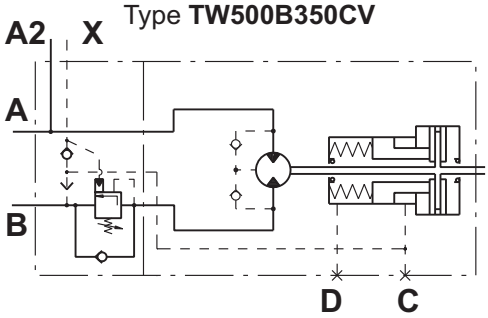

SPECIFICATION DATA

Type		TW500B350...V
Displacement, cm³/rev [in³/rev]		475 [29]
Max. Speed, RPM	Cont.	40
	Int.*	60
Max. Torque, daNm [lb-in]	Cont.	114 [10 000]
	Int.*	135 [12 000]
Max. Output, kW [HP]	Cont.	4,1 [5.4]
	Int.*	7,0 [9.39]
Max. Pressure Drop, bar [PSI]	Cont.	170 [2500]
	Int.*	200 [2900]
Max. Oil Flow, lpm [GPM]	Cont.	20 [5.3]
	Int.*	35 [9.2]
Max. Return Pressure without Drain Line or Max. Pressure in Drain Line, bar [PSI]		75 [1088]
Min. Starting Torque, daNm [lb-in]	At max. press. drop Cont.	95 [8400]
	At max. press. drop Int.*	112 [9940]
Min. Speed, RPM**		5
Static Torque for the Brake*, daNm [lb-in]**		164 [14515]
Release Pressure ±10%, bar [PSI]	initial	22,5...27,5 [326...400]
	full	28...34 [406...493]
Max. Steering Pressure, bar [PSI]		245 [3553]
Max. Pressure in Drain Space for the Brake, bar [PSI]		0,5 [7]
Pilot Ratio for the Valve		4,25:1

* Intermittent operation: the permissible values may occur for max. 10% of every minute.
** For speeds of 5 RPM lower than given, consult factory or your regional manager.
*** Static torque is obtained at working pressure - 0 bar [0 PSI].

DIMENSIONS and MOUNTING

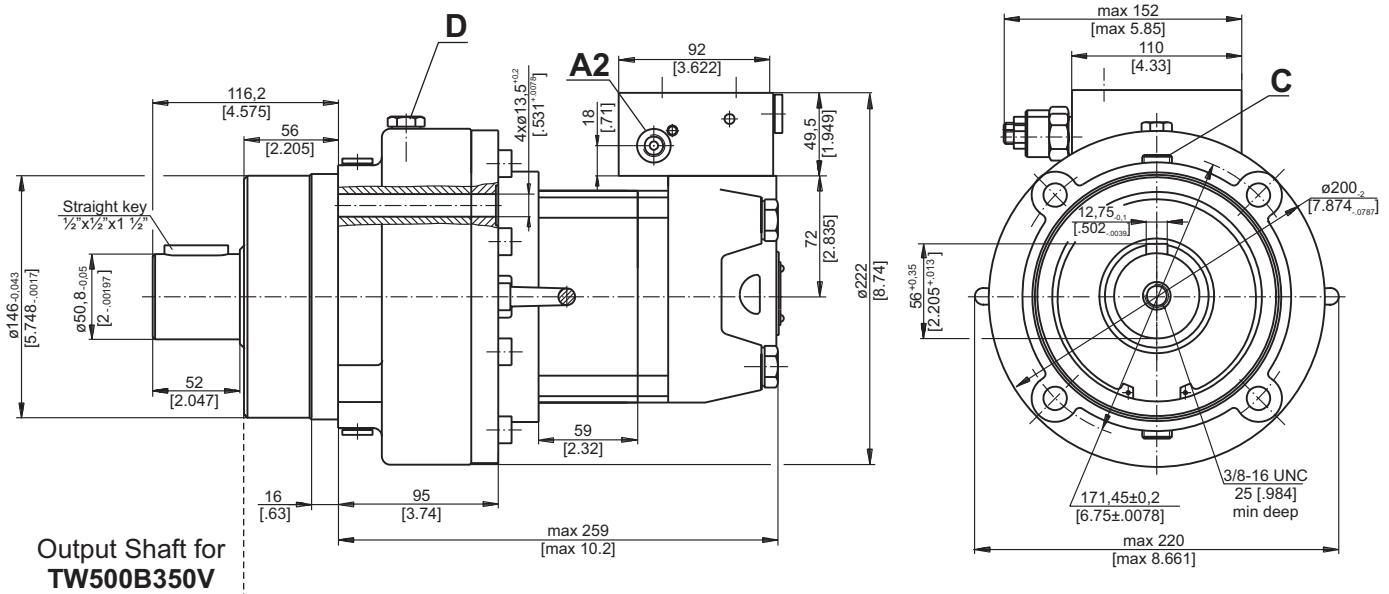

Output Shaft for
TW500B350V

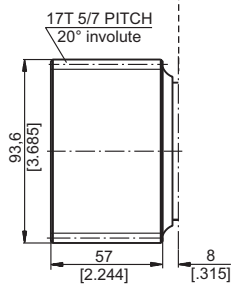

Valve Block for
TW500B350V

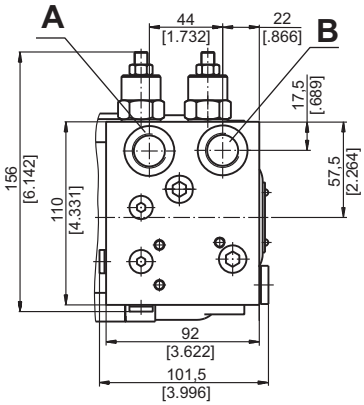

Valve Block for
TW500B350CV

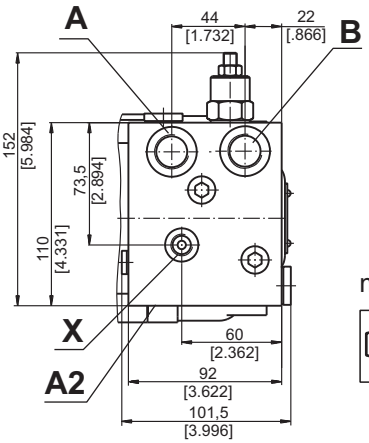

mm [in]

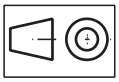

A,B : 2x7/8-14 UNF, 17,5 [.65] deep
D : 7/16-20 UNF
C : G1/4
A2, X: 7/16-18 UNF, 12 [.475] deep

Note: For different port's thread contact with "M+S Hydraulic".

PERMISSIBLE SHAFT LOADS

The curve applies to a B10 bearing life of 3000 hours at 40 RPM.

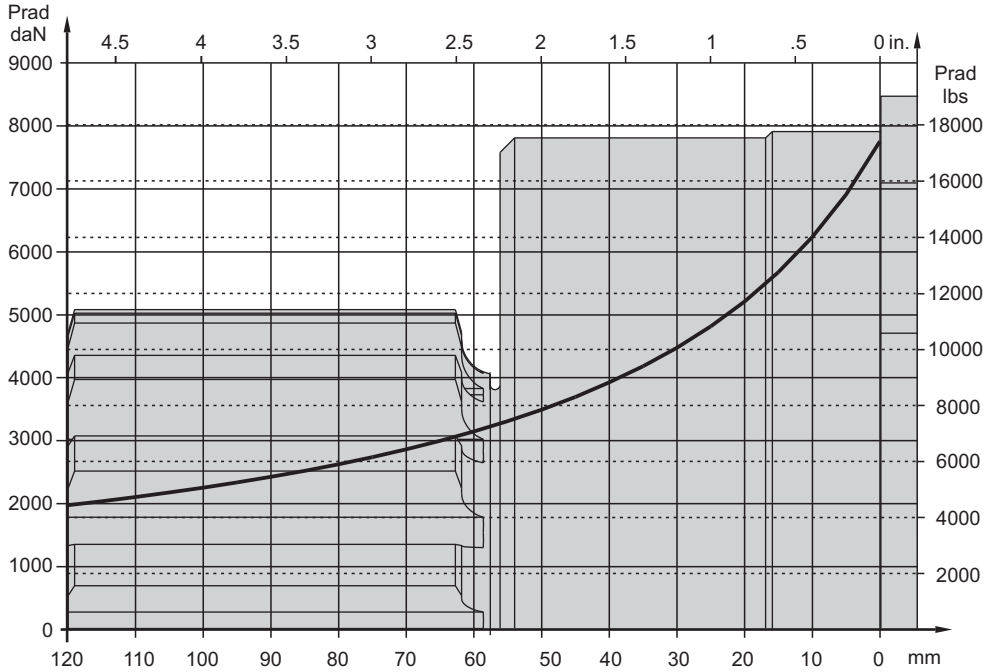

FUNCTION DIAGRAMS

TW 500

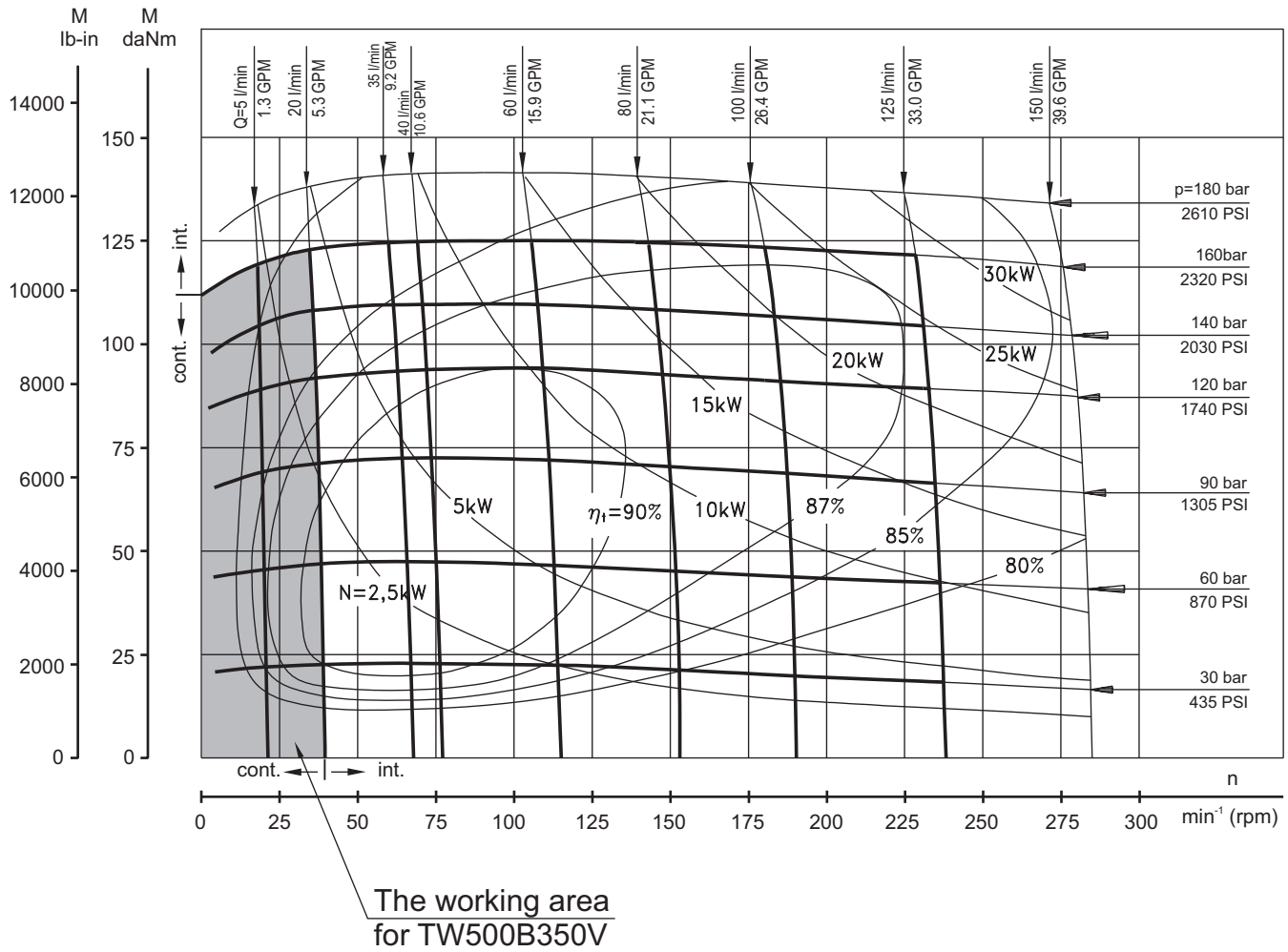

ORDER CODE

1		2	3	4	5	6	7	8
T	W	500	B	350		V		

Pos.1 - Type

T - Motor MLHT

Pos.2 - Displacement code

Pos.3 - Brake

Pos.4 - Brake Type

Pos.5 - Shaft Extension*

omit - 17T 5/7 pitch 20° involute

C - Straight key ½"x½"x1 ½"

Pos.6 - Valve

Pos.7 - Special Features (see page 72)

Pos.8 - Design Series

omit - Factory specified

The motor-brakes are mangano-phosphatized as standard.

VALVES FOR HYDRAULIC MOTORS

CONTENTS

Valves for MP, MR and MH type **KPBR** ... 52
Valves for MS type **KPBS** ... 53
Valves for MT type **KPBT** ... 54
Valves for MV type **KPBV** ... 55
Valves for RW and HW type **KPBW** ... 56
Valves for HP and HR type **KPBHR...E** ... 57
Valves for HP and HR type **KPBHR...D** ... 58
Switch valves type **KPWR** and **KPWS** 59
Switch valves type **KPWT** and **KPWV** 60
Crossover Relief Valves ... 61
Valves for MP, MR and MH type **KP...R** ... 62
Valves for MS type **KP...S** ... 62
Valves for MT type **KP...T** ... 63
Valves for MV type **KP...V** ... 64
Valves for RW and HW type **KP...W** ... 67
Valves for HR and RK type **KPDHR** and **KPDRK** ... 69
Order Code ... 70÷71

OVERCENTER VALVES with BRAKE CONTROL

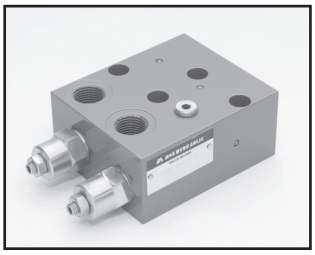

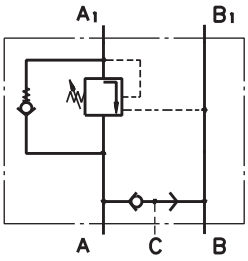

Single Overcenter Valves with Brake Control type KPB … AE

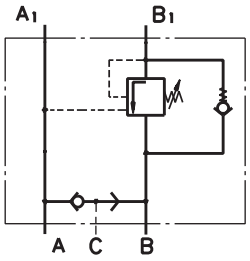

Single Overcenter Valves with Brake Control type KPB … BE

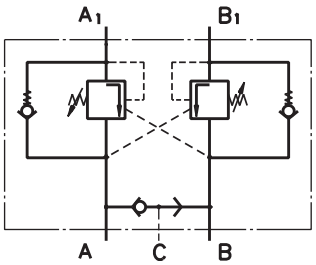

Dual Overcenter Valves with Brake Control type KPB … D

SPECIFICATION DATA

Parameters	Type											
	KPBR...E	KPBS...E	KPBR...D	KPBS...D	KPBW...E	KPBW...D	KPBHR...E	KPBHR...D	KPBT...E	KPBT...D	KPBV...E	KPBV...D
Flow Rate, lpm [GPM]	60 [15.85]								100 [26.4]		200 [52.8]	
Rated Pressure*, bar [PSI]	60÷280 [870÷4060]						70÷250 [1015÷3625]					
Pilot Ratio	4,25:1											
Weight, kg [lb]	3,020 [6.658]	2,900 [6.39]	3,060 [6.746]	2,920 [6.437]	3,050 [7.724]	3,140 [6.923]	2,300 [5.071]	2,400 [5.291]	5,400 [11.905]	5,800 [12.787]	9,200 [20.283]	9,750 [21.495]

*Pressure Settings are at flow rate of 5 lpm [1.3 GPM] and viscosity 32 mm²/s [150 SUS] at 50 °C [122° F].

PRESSURE LOSSES

KPBR..., KPBS..., KPBW..., KPBHR...

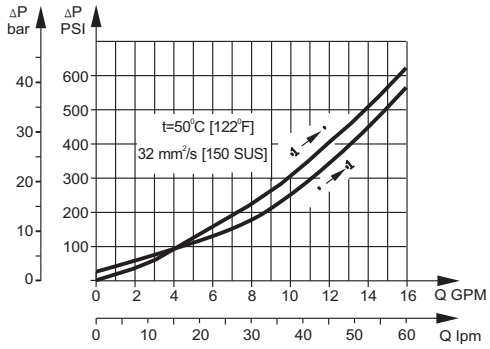

KPBT...

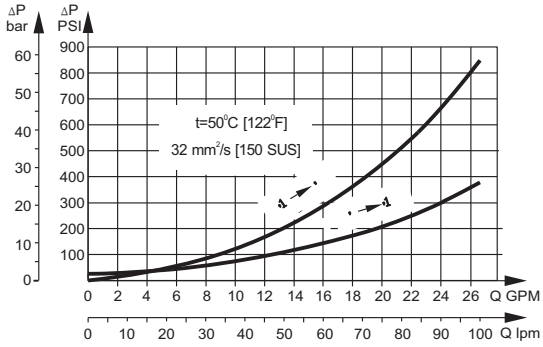

KPBV...

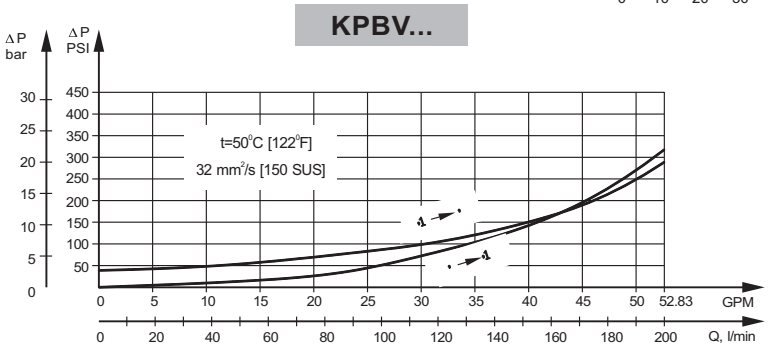

VALVES for MP, MR and MH HYDRAULIC MOTORS

SINGLE VALVE KPBR-250/1/E...

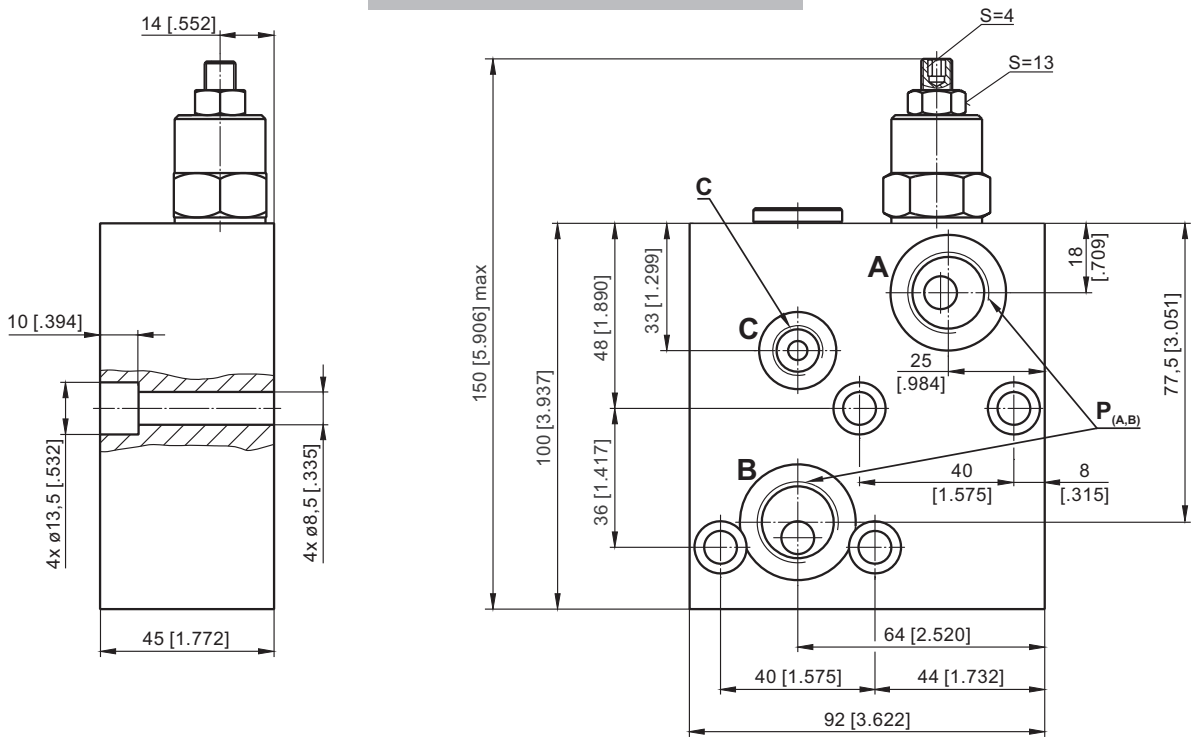

DUAL VALVE KPBR-250/1/D...

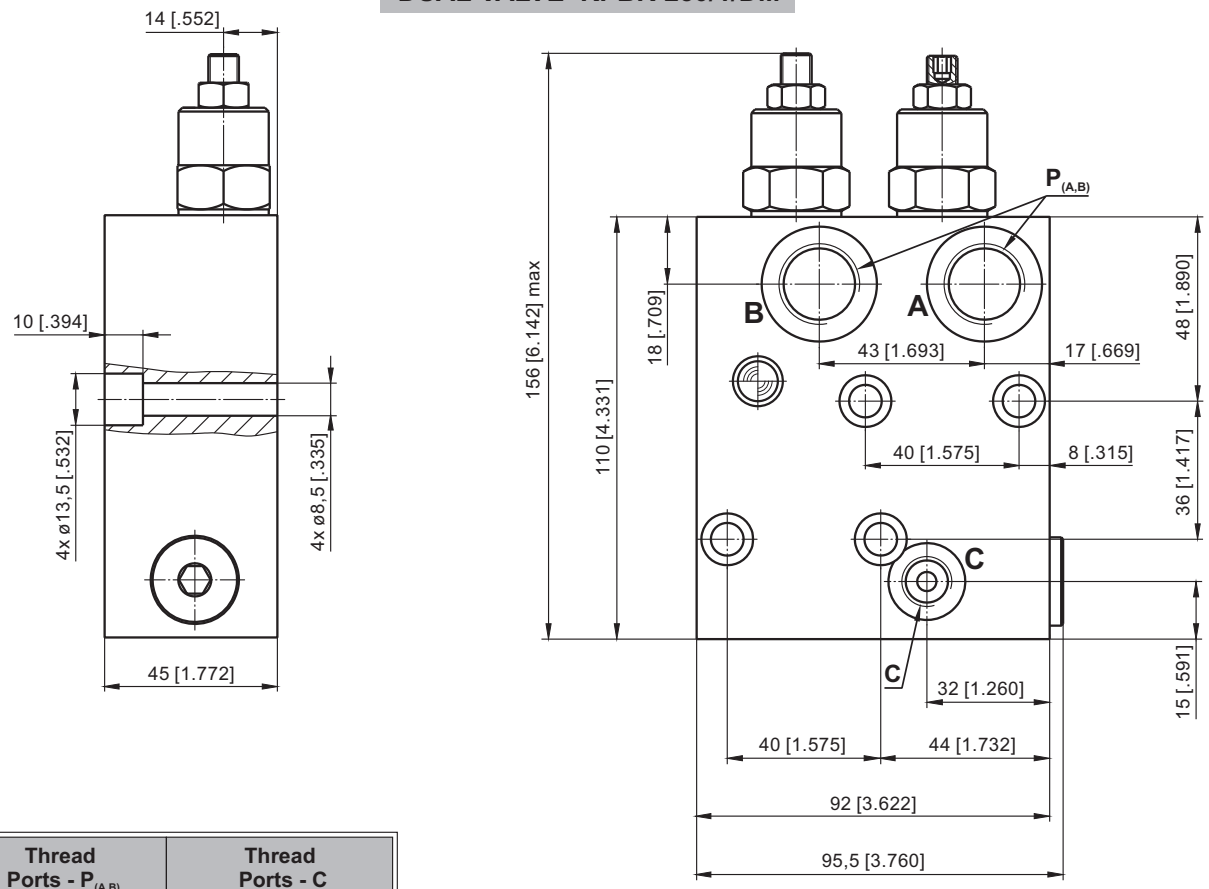

	Thread Ports - $P_{(A,B)}$	Thread Ports - C
-	G1/2 16 [.63] depth	G1/4 12 [.47] depth
M	M22x1,5 16 [.63] depth	M14x1,5 12 [.47] depth
A	7/8 - 14 UNF O-ring 16 [.63] depth	7/16 - 20 UNF O-ring 12,7 [.50] depth

mm [in]

Note: **KPBR** Blocks are installed directly on MP, MR and MH Motors with four screws M8x45 - 8.8 DIN 912 or 5/16-18 UNC, 1.75 long ANSI B 18.3 . Tightening torque $2{,}0^{+0{,}5}$ daNm [177^{+44} lb-in].

VALVES for MS HYDRAULIC MOTORS

SINGLE VALVE KPBS-250/1/E...

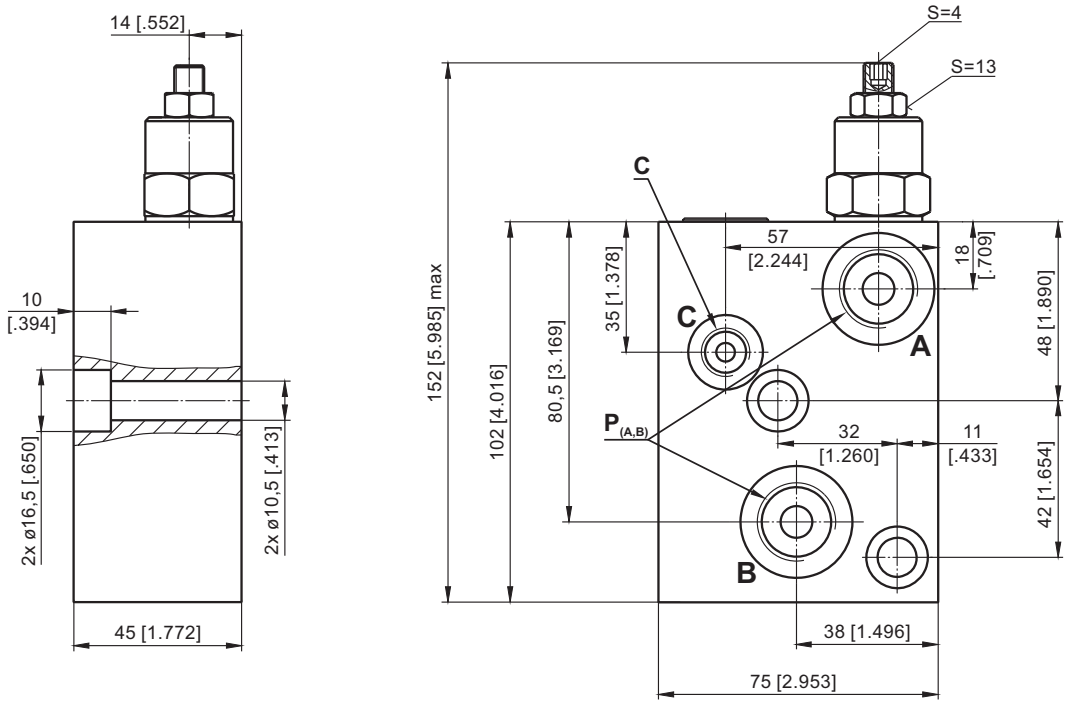

DUAL VALVE KPBS-250/1/D...

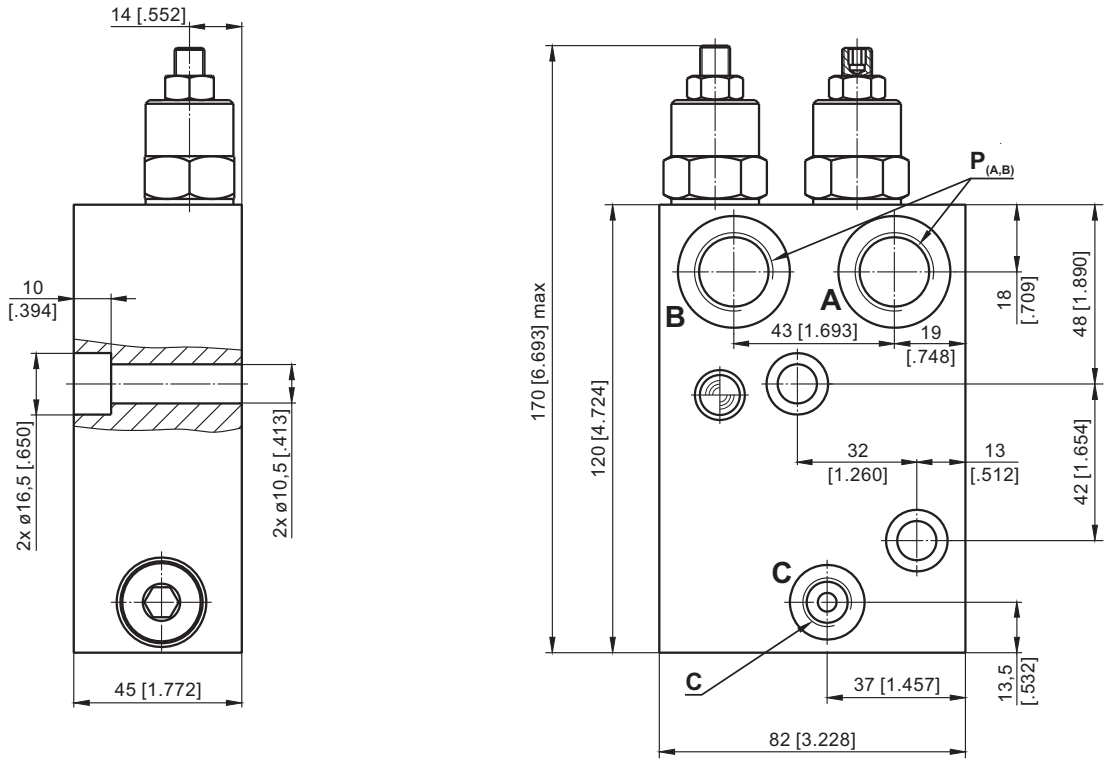

	Thread Ports - $P_{(A,B)}$	Thread Ports - C
-	G1/2 16 [.63] depth	G1/4 12 [.47] depth
M	M22x1,5 16 [.63] depth	M14x1,5 12 [.47] depth
A	7/8 - 14 UNF O-ring 16 [.63] depth	7/16 - 20 UNF O-ring 12,7 [.50] depth

mm [in]

Note: **KPBS** Blocks are installed directly on MS Motors with two screws M10x45 - 8.8 DIN 912 or 3/8-16UNC, 1.75 long ANSI B 18.3 . Tightening torque 3,5 daNm [310 lb-in].

VALVES for MT HYDRAULIC MOTORS

SINGLE VALVE KPBT-250/1/AE...

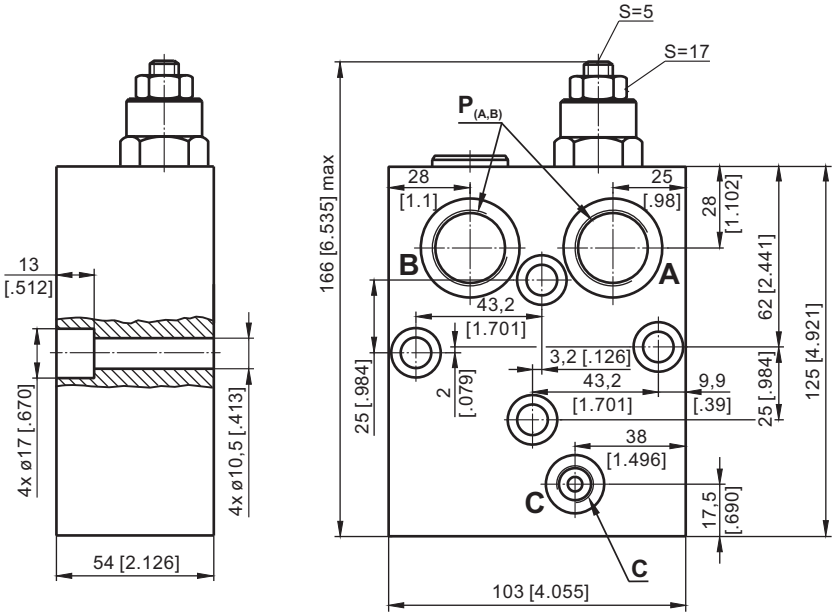

SINGLE VALVE KPBT-250/1/BE...

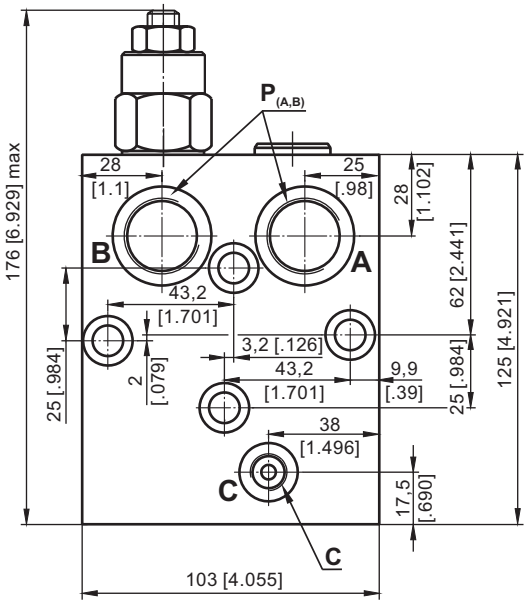

DUAL VALVE KPBT-250/1/D...

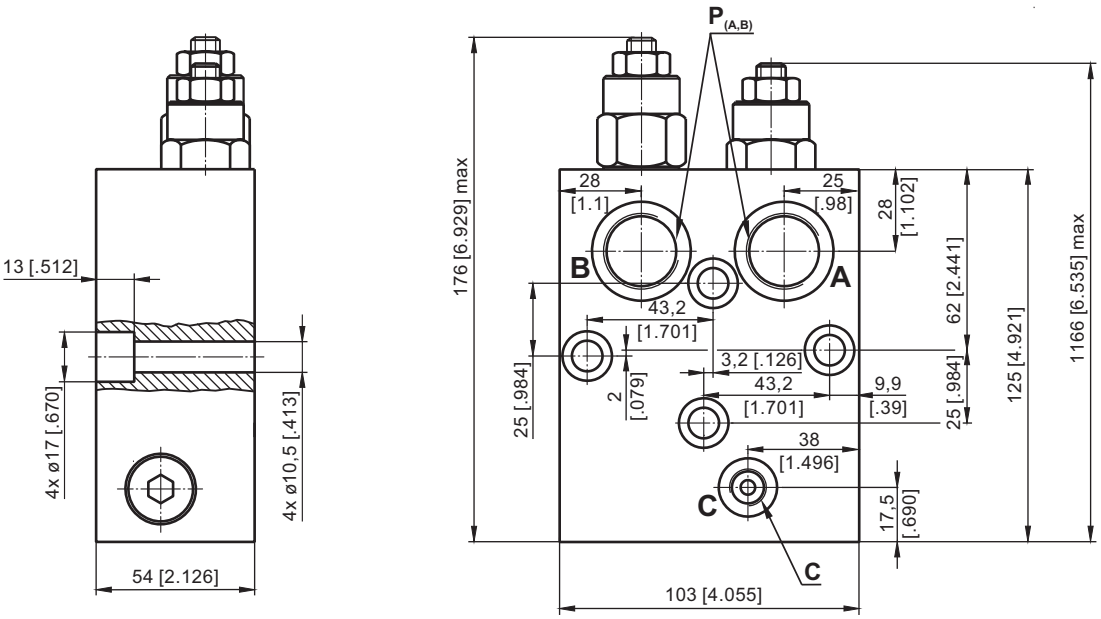

	Thread Ports - $P_{(A,B)}$	Thread Ports - C
-	G3/4 17 [.67] depth	G1/4 14 [.55] depth
M	M27x2 17 [.67] depth	M14x1,5 14 [.55] depth
A	1 1/16 - 12 UN O-ring 17 [.67] depth	7/16 - 20 UNF O-ring 12,7 [.50] depth

mm [in]

Note: **KPBT** Blocks are installed directly on MT Motors with four screws M10x50 - 8.8 DIN 912. Tightening torque 3,5 daNm [310 lb-in].

VALVES for MV HYDRAULIC MOTORS

DUAL VALVE KPBV-250/1/D...

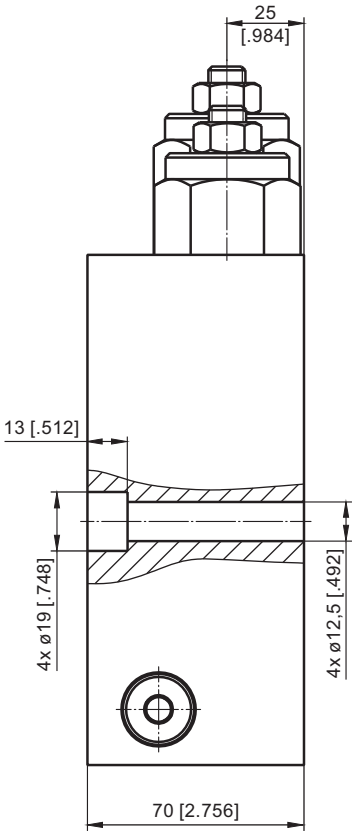

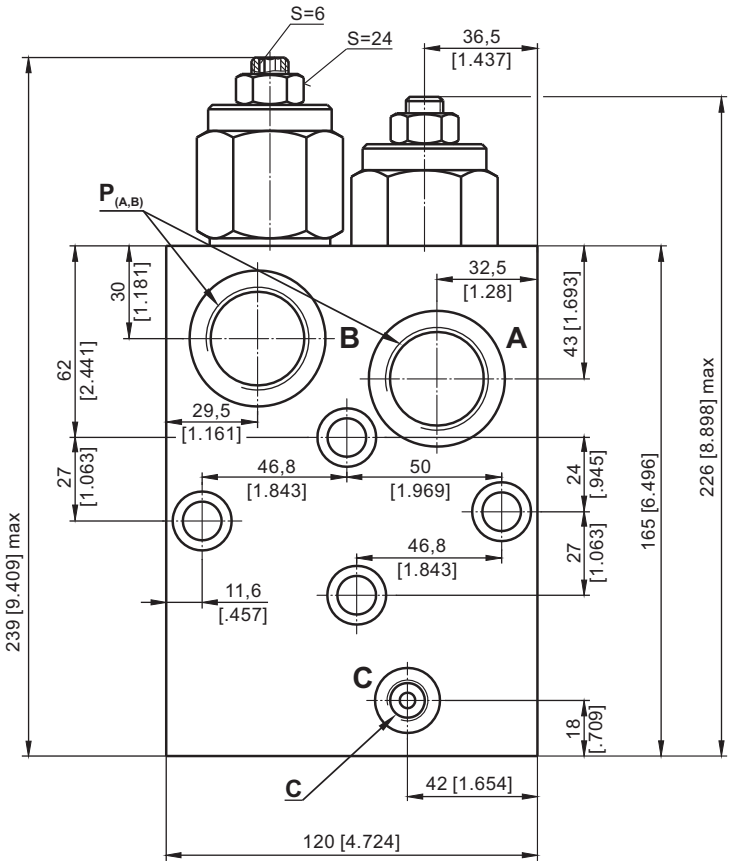

SINGLE VALVE KPBV-250/1/AE...

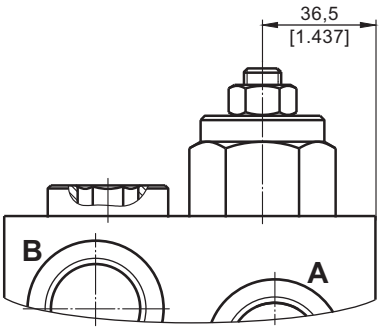

SINGLE VALVE KPBV-250/1/BE...

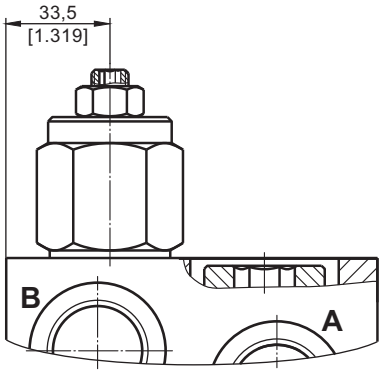

	Thread Ports - $P_{(A,B)}$	Thread Ports - C
-	G 1 20 [.79] depth	G1/4 14 [.55] depth
M	M33x2 20 [.79] depth	M14x1,5 14 [.55] depth
A	1 5/16 - 12 UN O-ring 20 [.79] depth	7/16 - 20 UNF O-ring 12,7 [.50] depth

mm [in]

Note: **KPBV** Blocks are installed directly on MV Motors with four screws M12x70 - 8.8 DIN 912. Tightening torque 6,5 daNm [575 lb-in].

VALVES for RW and HW HYDRAULIC MOTORS

DUAL VALVE KPBW-250/1/D...

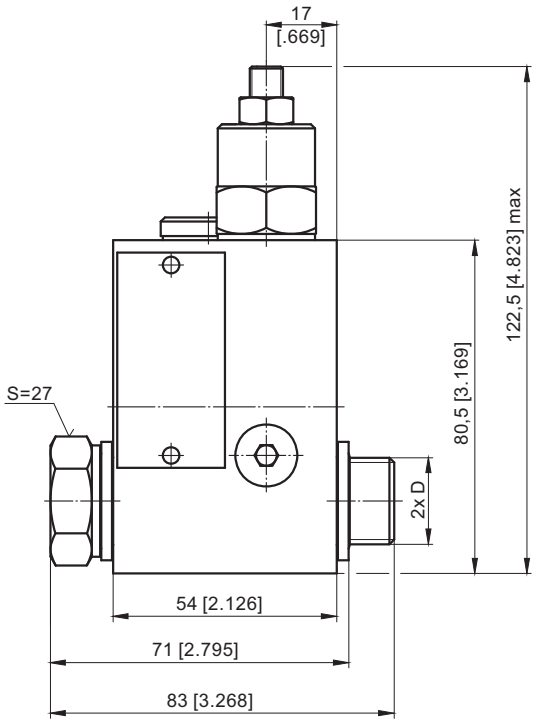

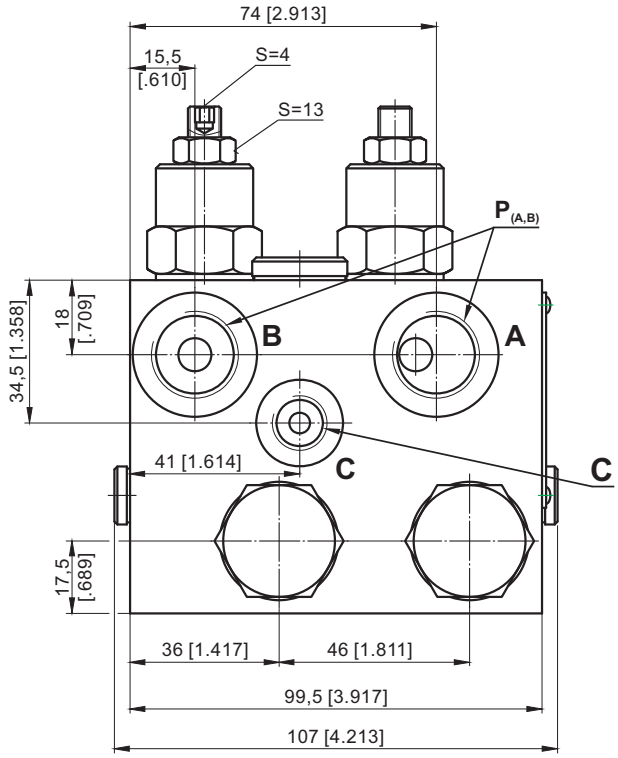

KPBW-...A

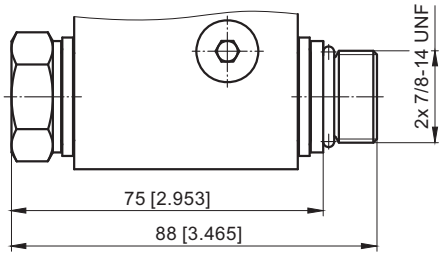

SINGLE VALVE KPBW-250/1/AE...

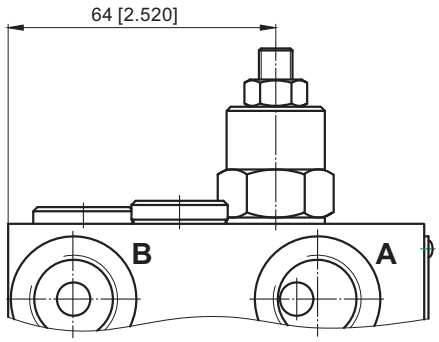

SINGLE VALVE KPBW-250/1/BE...

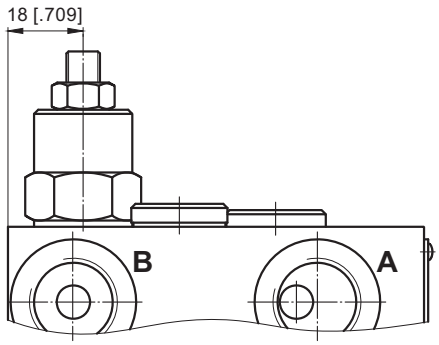

	Thread Ports - $P_{(A,B)}$	Thread Port - C	Thread Ports - D
-	G1/2 16 [.63] depth	G1/4 12 [.47] depth	G1/2 12 [.47] length
M	M22x1,5 16 [.63] depth	M14x1,5 12 [.47] depth	M22x1,5 12 [.47] length
A	7/8 - 14 UNF O-ring 116 [.63] depth	7/16 - 20 UNF O-ring 12,7 [.50] depth	7/8 - 14 UNF O-ring 13 [.51] length

mm [in]

Note: KPBW Blocks assembly to RW or HW motors is done with two screws (thread D) included in the valve set. Tightening torque 8 daNm [710 lb-in].

VALVES for HP and HR HYDRAULIC MOTORS

SINGLE VALVE KPBHR-250/1/AE...

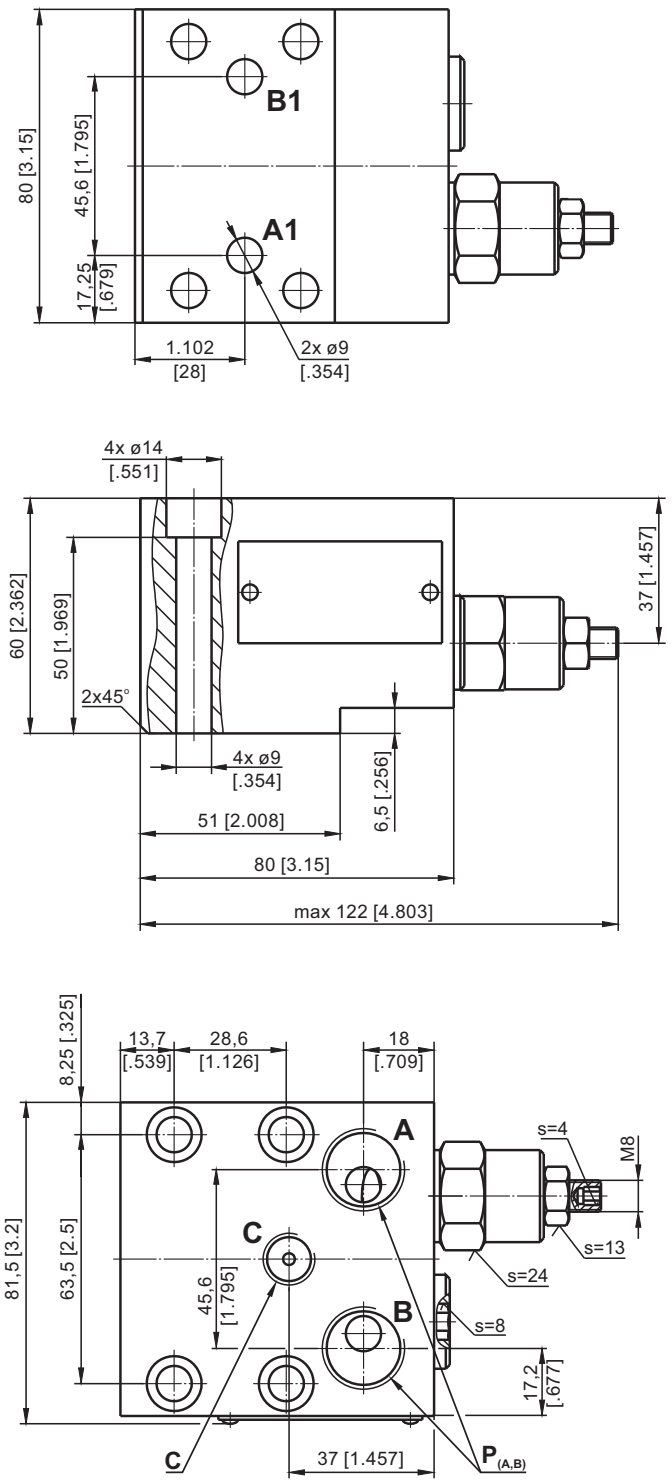

SINGLE VALVE KPBHR-250/1/BE...

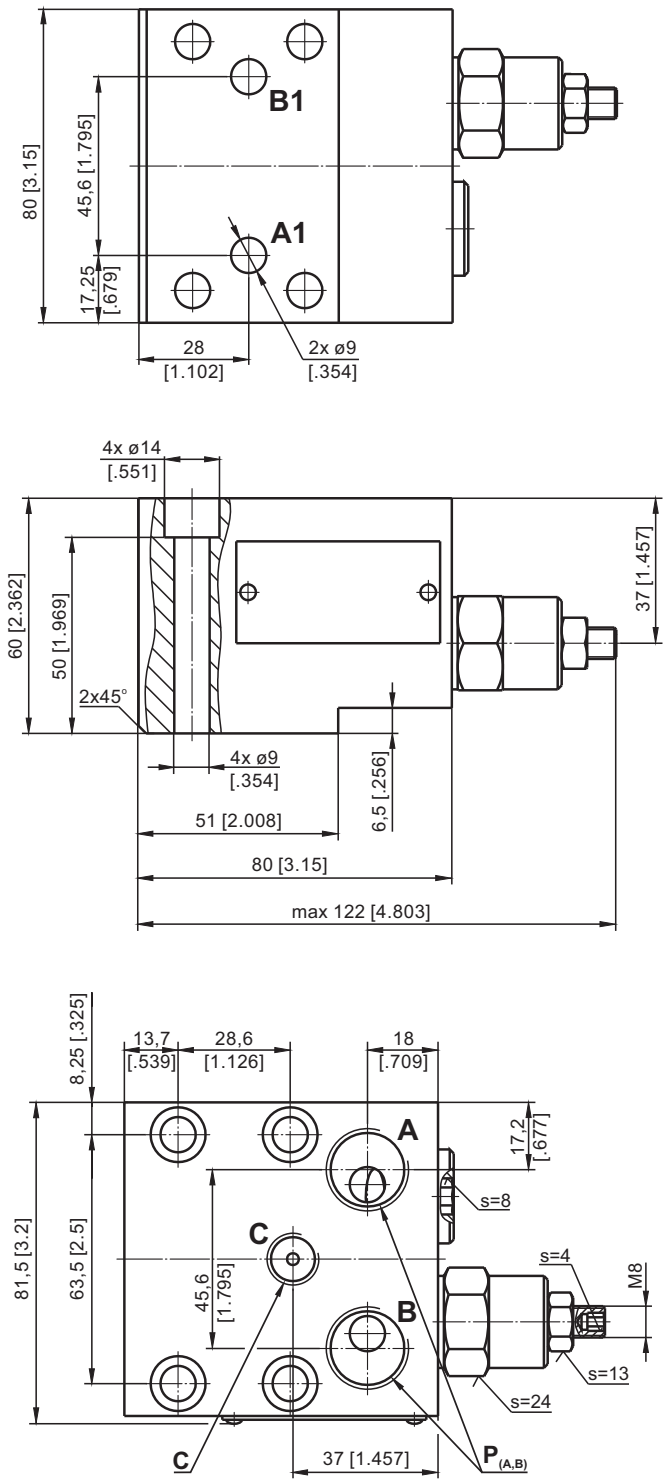

	Thread Ports - $P_{(A,B)}$	Thread Ports - C
-	G1/2 17 [.67] depth	G1/4 14 [.55] depth
M	M22x1,5 17 [.67] depth	M14x1,5 14 [.55] depth
A	7/8 - 14 UNF O-ring 17 [.67] depth	7/16 - 20 UNF O-ring 12,7 [.50] depth

mm [in]

Note: **KPBHR** Blocks are installed directly on HP and HR Motors with four bolts 5/16-18UNC, 2.5 long or M8x60 - 8.8 DIN 912. Tightening torque $2,0^{+0,5}$ daNm [177^{+44} lb-in].

VALVES for HP and HR HYDRAULIC MOTORS

DUAL VALVE KPBHR-250/1/D...

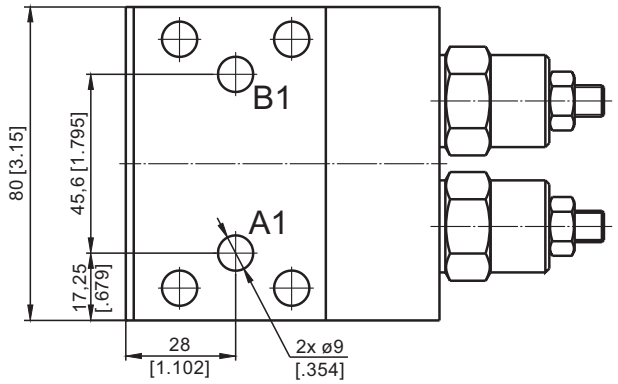

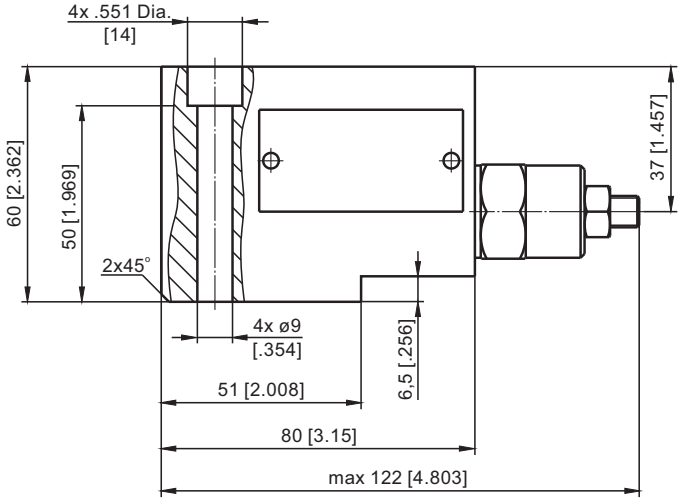

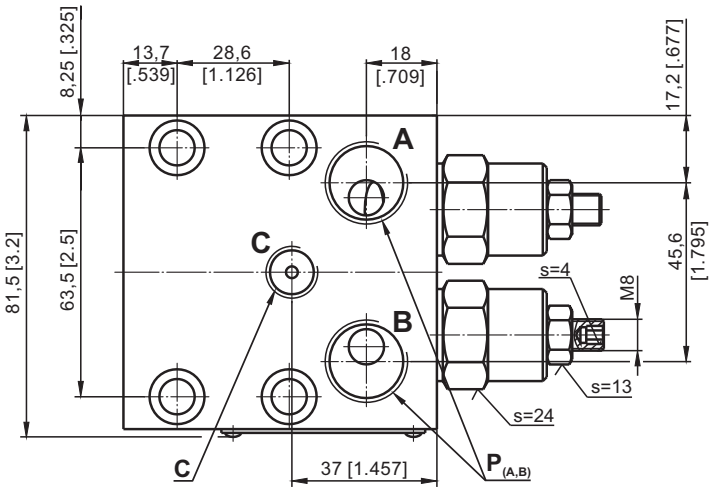

	Thread Ports - $P_{(A,B)}$	Thread Ports - C
-	G1/2 17 [.67] depth	G1/4 14 [.55] depth
M	M22x1,5 17 [.67] depth	M14x1,5 14 [.55] depth
A	7/8 - 14 UNF O-ring 17 [.67] depth	7/16 - 20 UNF O-ring 12,7 [.50] depth

mm [in]

Note: **KPBHR** Blocks are installed directly on HP and HR Motors with four bolts 5/16-18UNC, 2.5 long or M8x60 - 8.8 DIN 912. Tightening torque $2,0^{+0,5}$ daNm [177^{+44} lb-in].

SWITCH VALVE

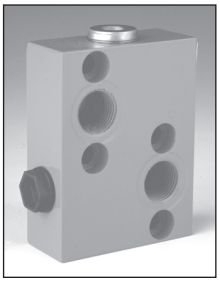

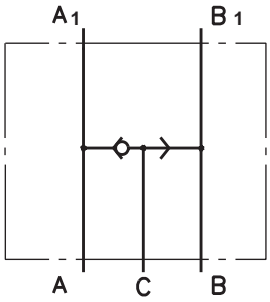

SPECIFICATION DATA

Parameters		Type	
		KPWR	KPWS
Flow Rate,	lpm [GPM]	60 [15.85]	
Pressure Range*,	bar [PSI]	250 [3625]	
Weight,	kg	0,850	0,670
	[lb]	[1.874]	[1.477]

VALVE for MP, MR, MH HYDRAULIC MOTORS KPWR

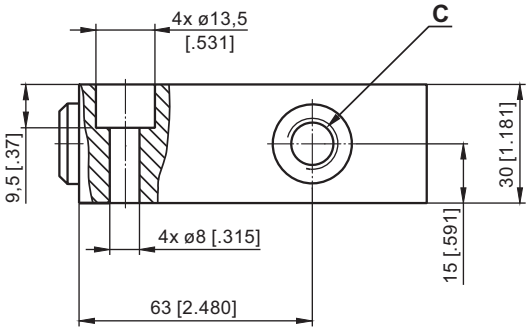

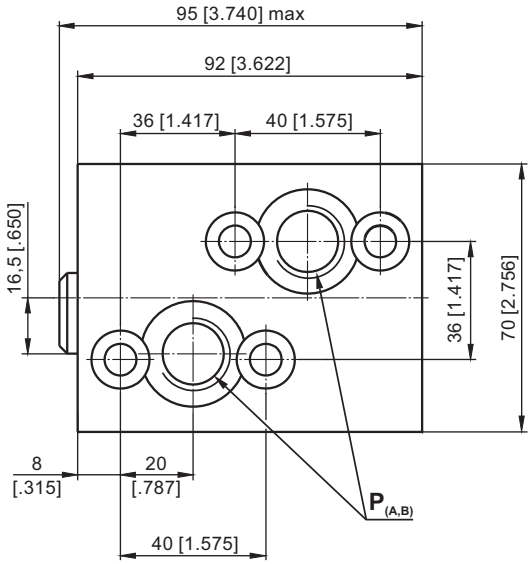

VALVE for MS HYDRAULIC MOTORS KPWS

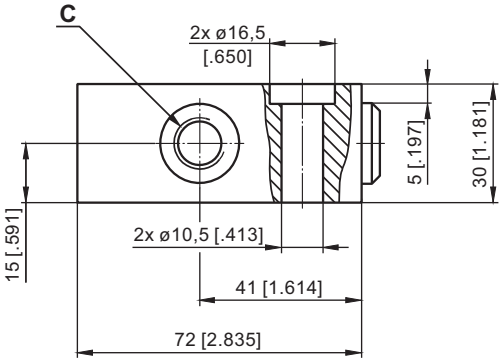

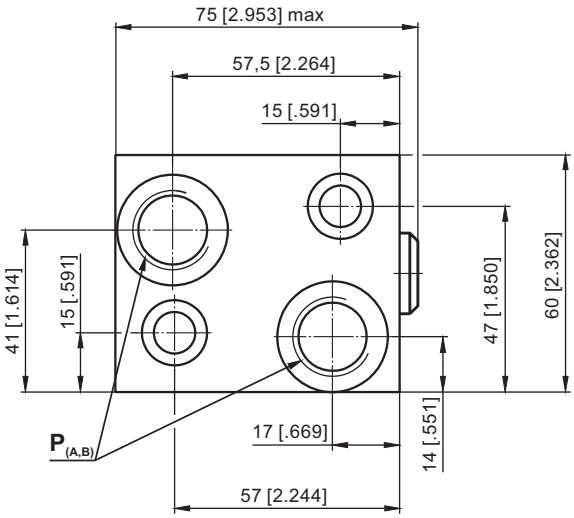

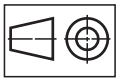
mm [in]

	Thread Ports - $P_{(A,B)}$	Thread Ports - C
-	G1/2 17 [.67] depth	G1/4 14 [.55] depth
M	M22x1,5 17 [.67] depth	M14x1,5 14 [.55] depth
A	7/8 - 14 UNF O-ring 17 [.67] depth	7/16 - 20 UNF O-ring 12,7 [.50] depth

Note: KPWR Blocks are installed directly on MP, MR and MH Motors with four screws M8x30 - 8.8 DIN 912 or 5/16-18UNC, 1.25 [.049] long ANSI B 18.3 .
Tightening torque $2{,}0^{+0{,}5}$ daNm [177^{+44} lb-in].

KPWS Blocks are installed directly on MS Motors with two screws M10x35 - 8.8 DIN 912 or 3/8-16UNC, 1.5 [.059] long ANSI B 18.3.
Tightening torque 3,5 daNm [336 lb-in].

SWITCH VALVE (continued)

SPECIFICATION DATA

Parameters		Type	
		KPWT	KPWV
Flow Rate,	lpm [GPM]	100 [26.4]	2100 [52.8]
Pressure Range,	bar [PSI]	250 [3625]	
Weight,	kg	1,800	3,150
	[lb]	[3.968]	[6.945]

VALVE for MT HYDRAULIC MOTORS KPWT

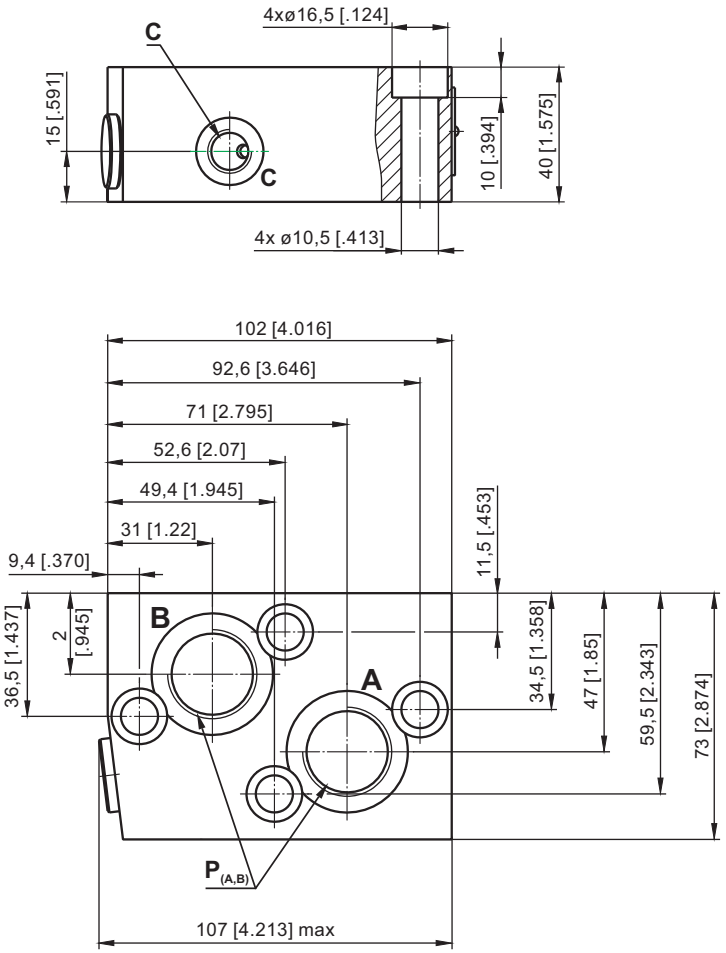

VALVE for MV HYDRAULIC MOTORS KPWV

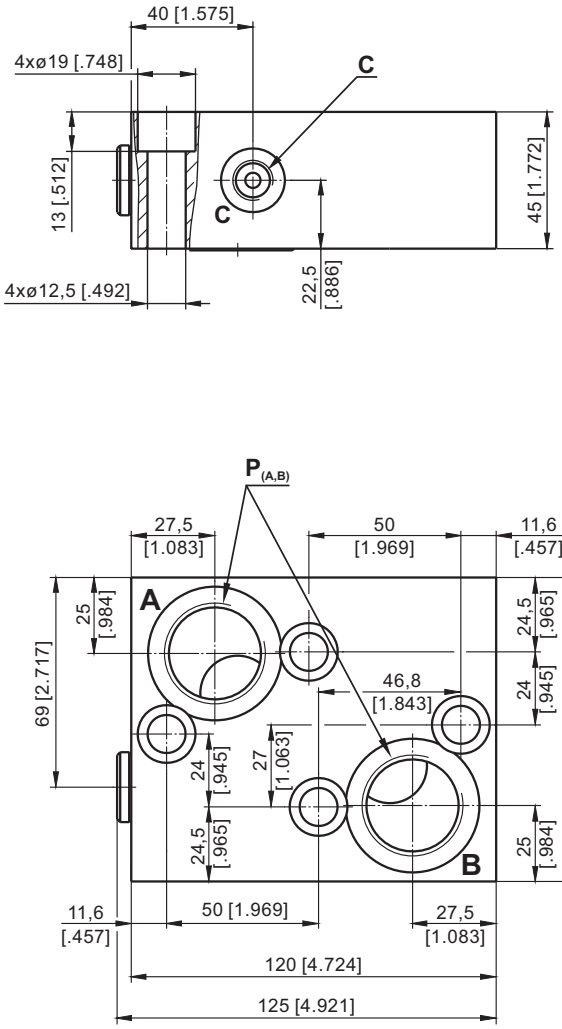

	Thread Ports - $P_{(A,B)}$	Thread Ports - C
-	G3/4 17 [.67] depth	G1/4 14 [.55] depth
M	M27x2 17 [.67] depth	M14x1,5 14 [.55] depth
A	1 1/16 - 12 UN O-ring 17 [.67] depth	7/16 - 20 UNF O-ring 12,7 [.50] depth

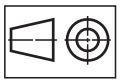

mm [in]

	Thread Ports - $P_{(A,B)}$	Thread Ports - C
-	G 1 20 [.79] depth	G1/4 14 [.55] depth
M	M33x2 20 [.79] depth	M14x1,5 14 [.55] depth
A	1 5/16 - 12 UN O-ring 20 [.79] depth	7/16 - 20 UNF O-ring 12,7 [.50] depth

Note: **KPWT** Blocks are installed directly on MT Motors with four screws M10x40 - 8.8 DIN 912. Tightening torque 3,5 daNm [336 lb-in].

KPWV Blocks are installed directly on MV Motors with four screws M12x45 - 8.8 DIN 912. Tightening torque 6,5 daNm [425 lb-in].

CROSSOVER RELIEF VALVES

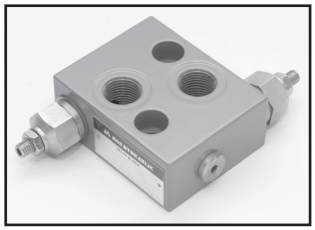

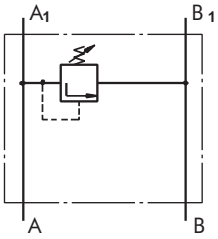

Single Crossover
Relief Valve
type KPE …

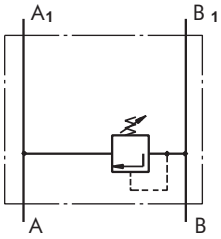

Single Crossover
Relief Valve
type KPE …

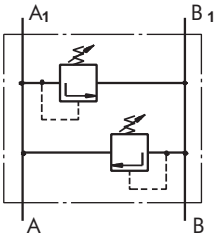

Dual Crossover
Relief Valve
type KPD …

SPECIFICATION DATA

Parameters		Type			
		KPER	KPDR	KPES	KPDS
Flow Rate,	lpm [GPM]	60 [15.85]			
Pressure Range*,	bar	30 ÷ 100;	50 ÷ 210;	80 ÷ 300	
	[PSI]	[435÷1450];	[725÷3050];	[1160÷4350]	
Weight,	kg	1,55		1,50	
	[lb]	[3.42]		[3.31]	

*Pressure Settings are at flow rate of 5 lpm [1.32 GPM]
and viscosity 32 mm^2/s [150 SUS] (50°C [122°F]).

Rated Pressure

A → 100 bar [1450 PSI]
B → 210 bar [3050 PSI]
C → 250 bar [3625 PSI]

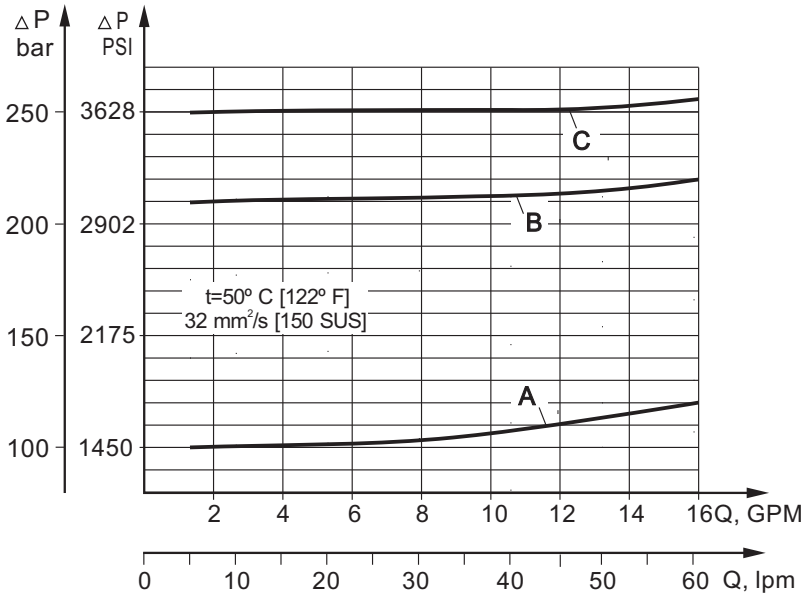

VALVES for MP, MR and MH HYDRAULIC MOTORS

DUAL VALVE KPDR

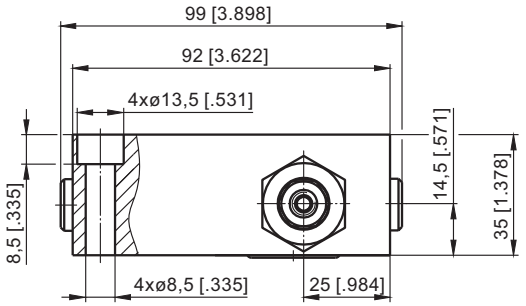

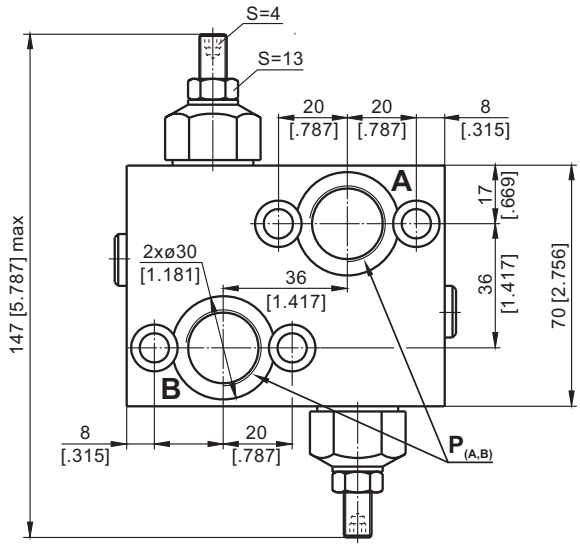

VALVES for MS HYDRAULIC MOTORS

DUAL VALVE KPDS

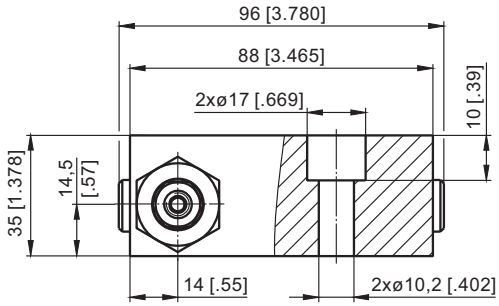

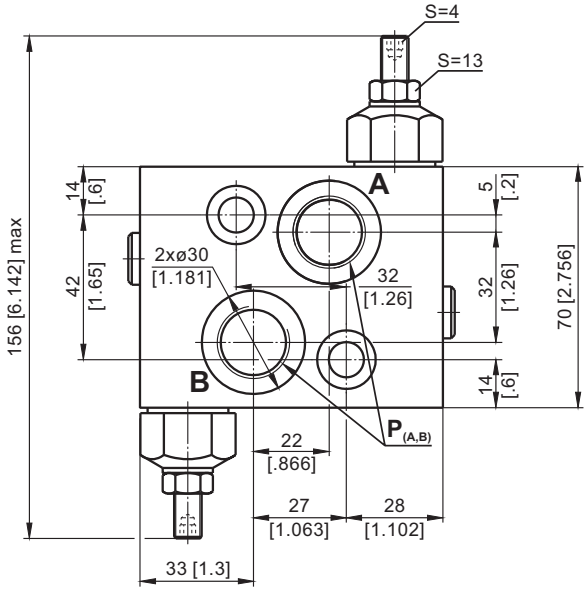

SINGLE VALVE KPER

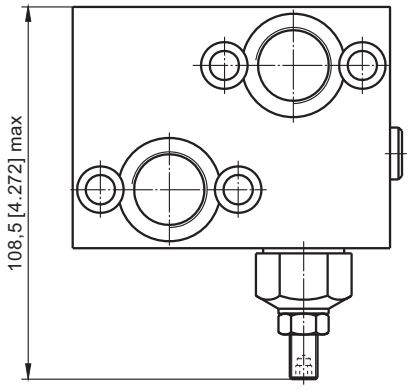

SINGLE VALVE KPES

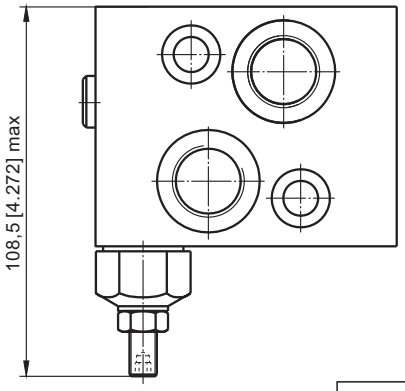

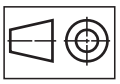

mm [in]

	Thread Ports - $P_{(A,B)}$
-	G1/2 20 [.79] depth
M	M22x1,5 20 [.79] depth
A	7/8 - 14 UNF O-ring 20 [.79] depth

Note: **KPDR** and **KPER** Blocks are installed directly on MP, MR and MH Motors with four screws M8x35 - 8.8 DIN 912 or 5/16-18 UNC, 1.5 long ANSI B 18.3 .
Tightening torque $2{,}0^{+0{,}5}$ daNm [177^{+44} lb-in].
KPDS and **KPES** Blocks are installed directly on MS Motors with two screws M10x35 - 8.8 DIN 912 or 3/8-16 UNC, 1.5 long ANSI B 18.3 .
Tightening torque 3,5 daNm [310 lb-in].

VALVES for MT HYDRAULIC MOTORS

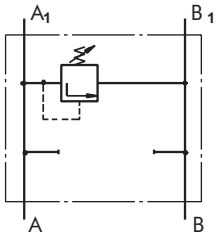

Single Crossover
Relief Valve
type KPEAT ...

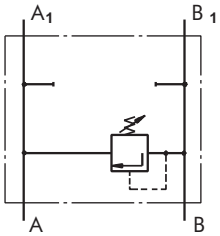

Single Crossover
Relief Valve
type KPEBT ...

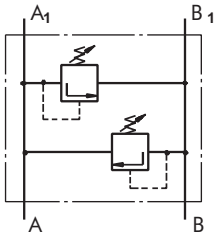

Dual Crossover
Relief Valve
type KPDT ...

SPECIFICATION DATA

Parameters		Type	
		KPE...T	KPDT
Flow Rate,	lpm [GPM]	120 [32]	
Pressure Range*,	bar	80÷210	
	[PSI]	[1160÷3050]	
Weight,	kg	5,10	5,54
	[lb]	[11.24]	[12.21]

*Pressure Settings are at flow rate of 5 lpm [1.32 GPM] and viscosity 32 mm^2/s [150 SUS] (50°C [122°F]).

Rated Pressure

A → 50 bar [725 PSI]
B → 100 bar [1450 PSI]
C → 150 bar [2175 PSI]
D → 210 bar [3045 PSI]

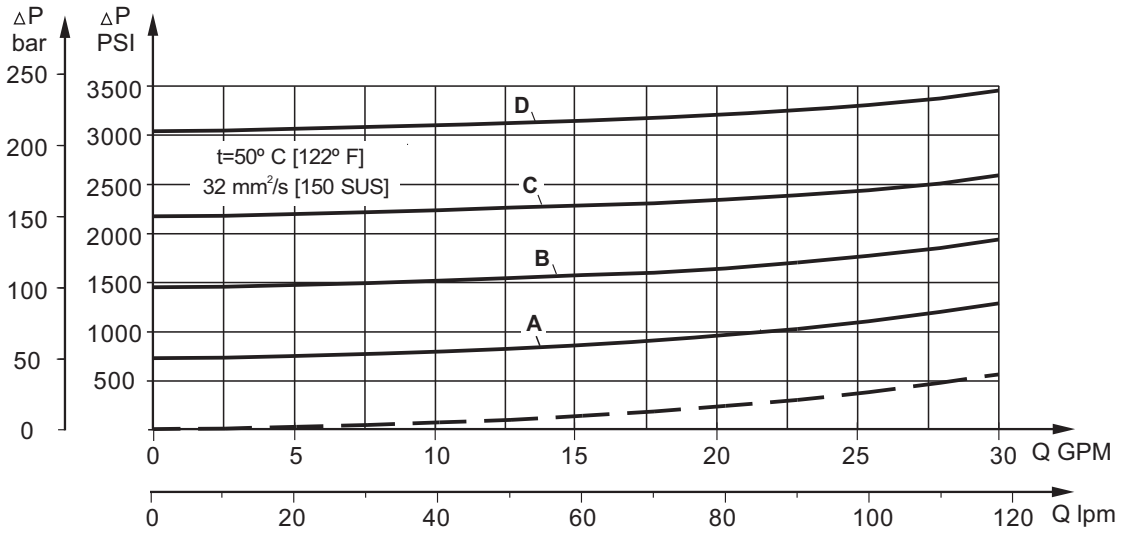

DUAL VALVE KPDT...

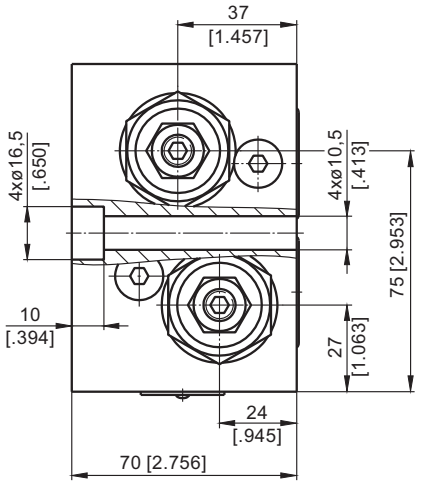

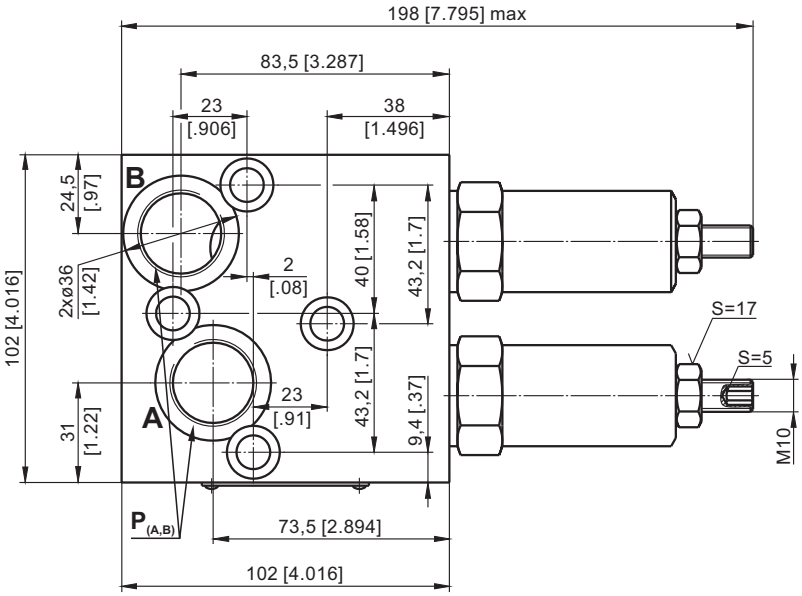

SINGLE VALVE KPEAT...

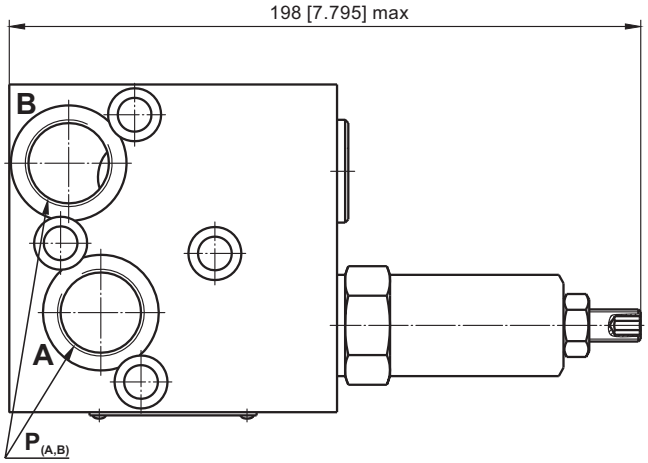

SINGLE VALVE KPEBT...

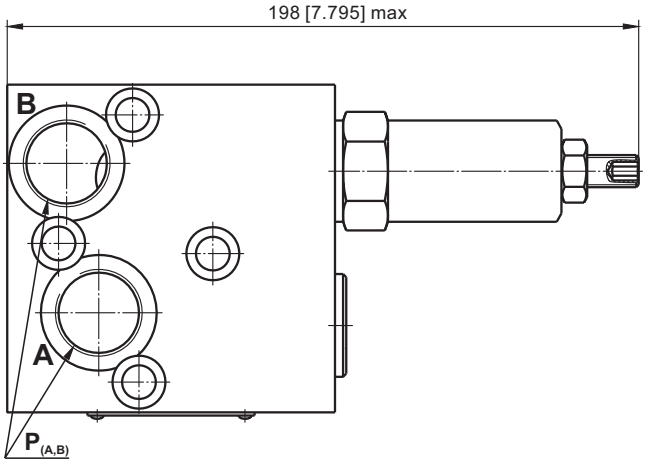

	Thread Ports - $P_{(A,B)}$
-	G3/4 20 [.79] depth
M	M27x2 20 [.79] depth
A	1 1/16 - 12 UN O-ring 20 [.79] depth

mm [in]

Note: **KPDT** and **KPE...T** Blocks are installed directly on MT Motors with four screws M10x70 - 8.8 DIN 912. Tightening torque 3,5 daNm [310 lb-in].

VALVES for MV HYDRAULIC MOTORS

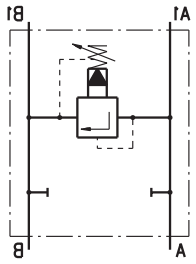

Single Crossover
Relief Valve
type KPEAV ...

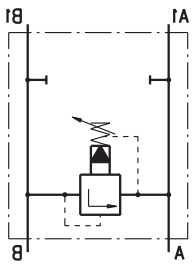

Single Crossover
Relief Valve
type KPEBV ...

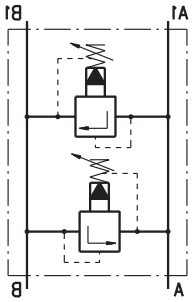

Dual Crossover
Relief Valve
type KPDV ...

SPECIFICATION DATA

Parameters		Type		
		KPEAV	KPEBV	KPDV
Flow Rate,	lpm [GPM]	200 [53]		
Pressure Range*,	bar	10÷100		20÷250
	[PSI]	[145÷1450]		[290÷3625]
Weight,	kg	4,90	7,10	8,00
	[lb]	[10.8]	[15.65]	[17.64]

*Pressure Settings are at flow rate of 5 lpm [1.32 GPM] and viscosity 32 mm^2/s [150 SUS] (50°C [122°F]).

Rated Pressure

A → 100 bar [1450 PSI]
B → 200 bar [2900 PSI]
C → 250 bar [3625 PSI]

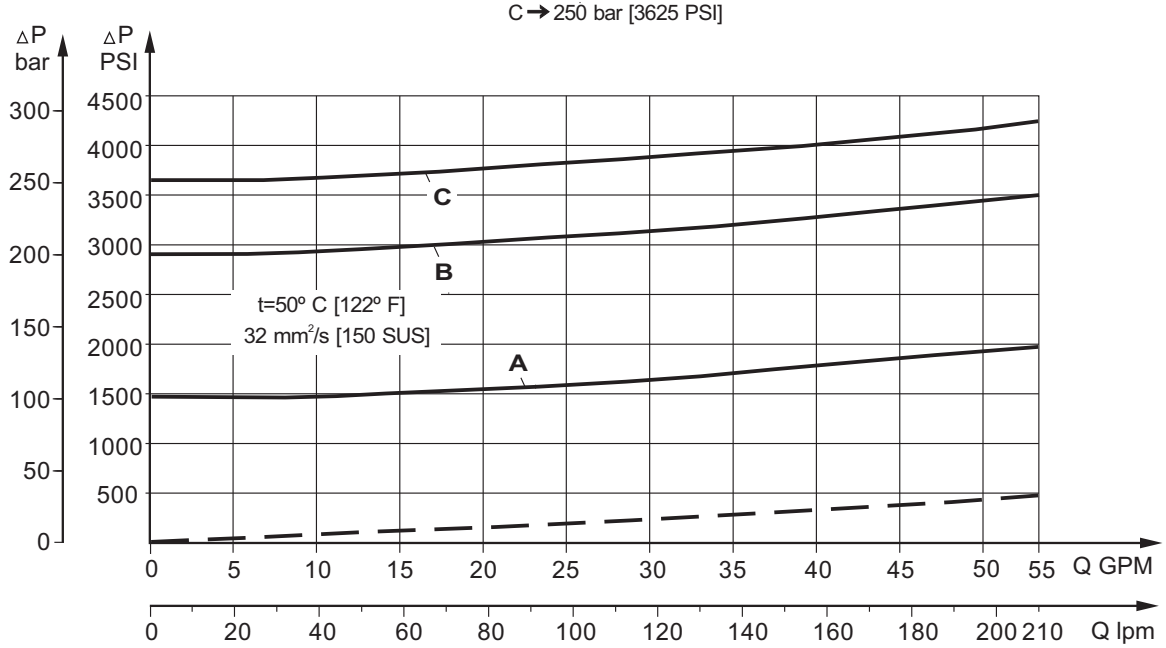

DUAL VALVE KPDV

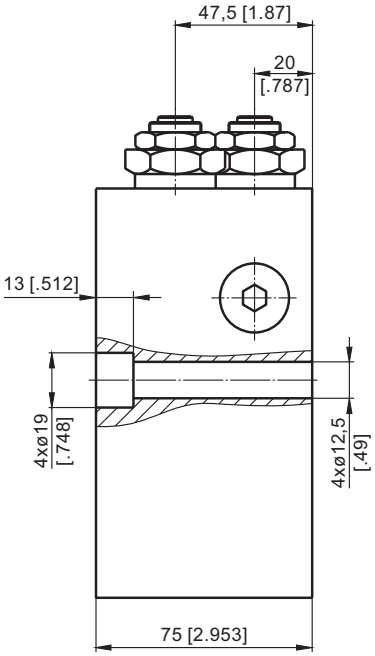

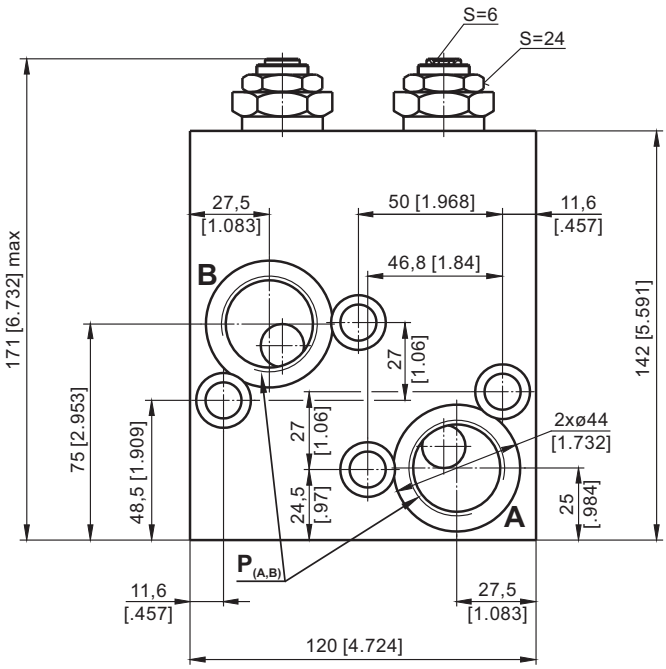

SINGLE VALVE KPEAV

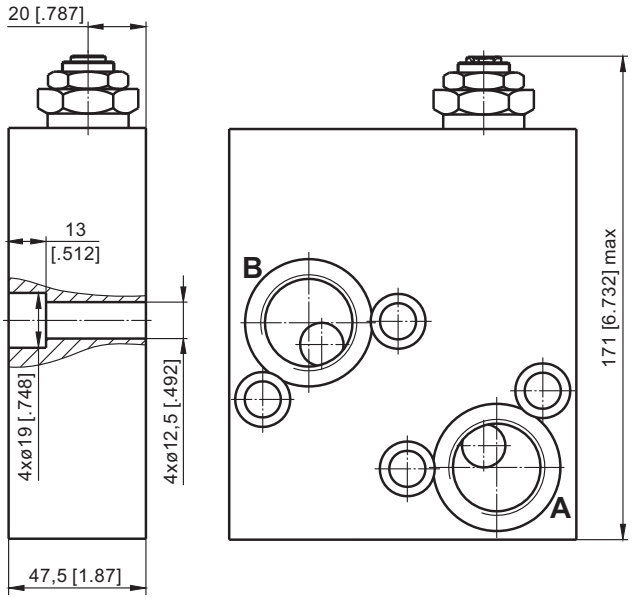

SINGLE VALVE KPEBV

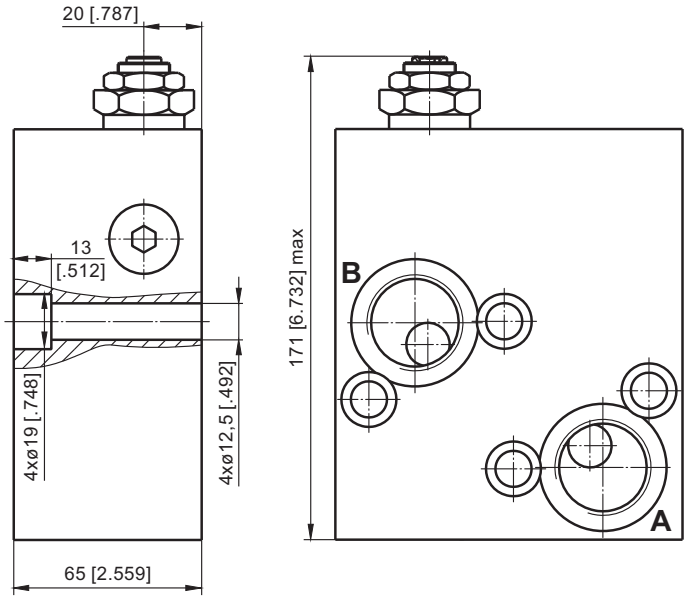

mm [in]

	Thread Ports - $P_{(A,B)}$
-	G1-A 20 [.79] depth
M	M33x2 20 [.79] depth
A	1 5/16 - 12 UN O-ring 20 [.79] depth

Note: **KPDV** Blocks are installed directly on MV Motors with four screws M12x75 - 8.8 DIN 912.
KPEAV Blocks are installed directly on MV Motors with four screws M12x45 - 8.8 DIN 912.
KPEBV Blocks are installed directly on MV Motors with four screws M12x65 - 8.8 DIN 912.
Tightening torque 7,5 daNm [665 lb-in].

VALVES for RW and HW HYDRAULIC MOTORS

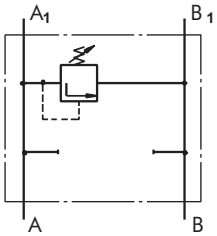

Single Crossover
Relief Valve
type KPEAW ...

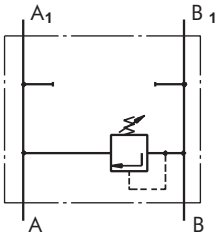

Single Crossover
Relief Valve
type KPEBW ...

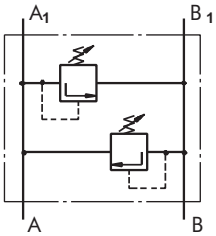

Dual Crossover
Relief Valve
type KPDW ...

SPECIFICATION DATA

Parameters		Type		
		KPE...W		KPDW
Flow Rate,	lpm [GPM]	60 [15.85]		
Pressure Range*,	bar	5÷40	30÷100	80÷250
	[PSI]	[75÷580]	[435÷1450]	[1160÷3625]
Weight,	kg	2,700		2,800
	[lb]	[5.95]		[6.17]

*Pressure Settings are at flow rate of 5 lpm [1.32 GPM] and viscosity 32 mm²/s [150 SUS] (50°C [122°F]).

Rated Pressure

A → 100 bar [1450 PSI]
B → 210 bar [3050 PSI]
C → 250 bar [3625 PSI]

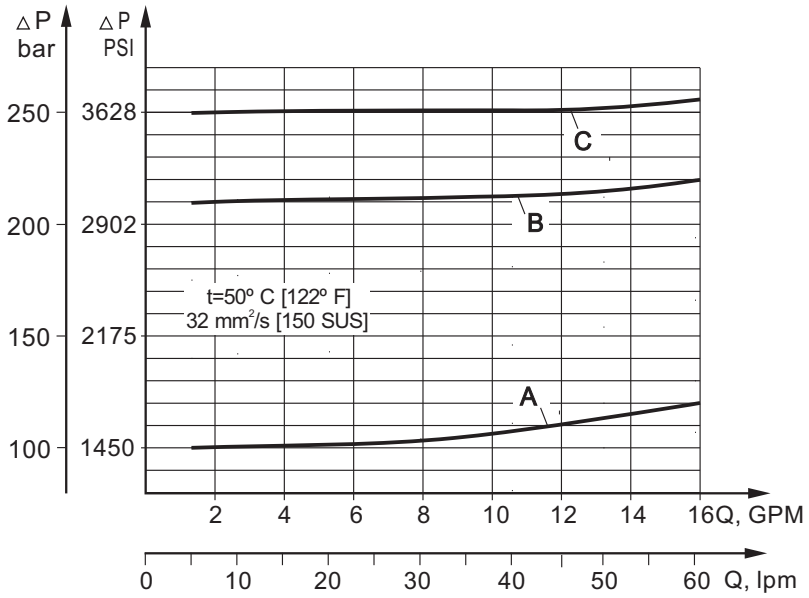

VALVES for RW and HW HYDRAULIC MOTORS

DUAL VALVE KPDW...

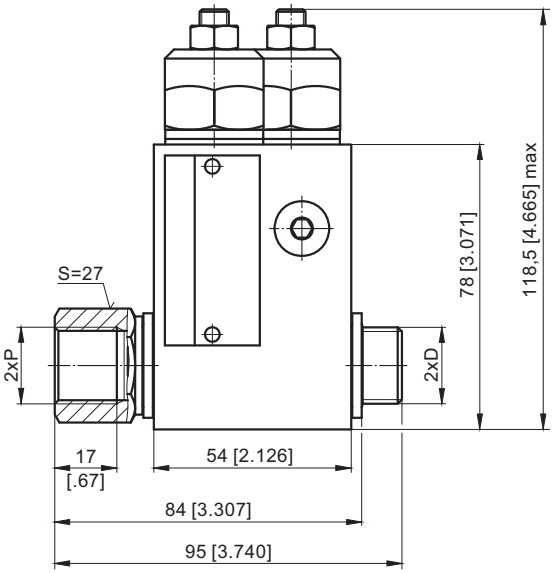

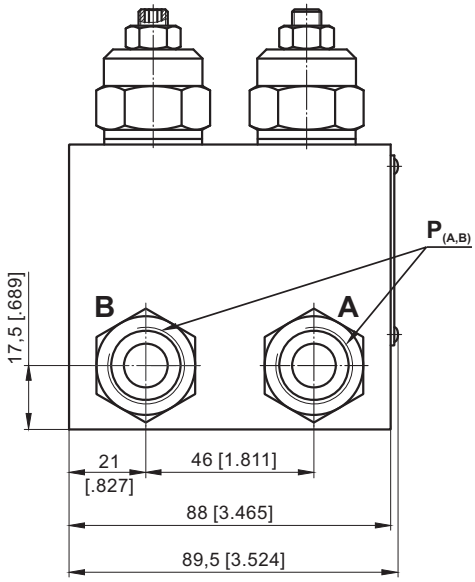

KPDW-...A

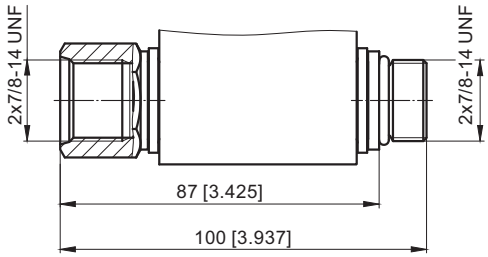

SINGLE VALVE KPEAW...

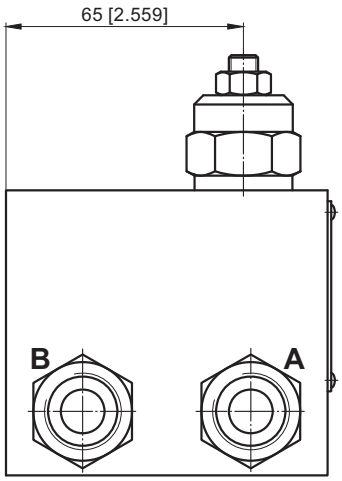

SINGLE VALVE KPEBW...

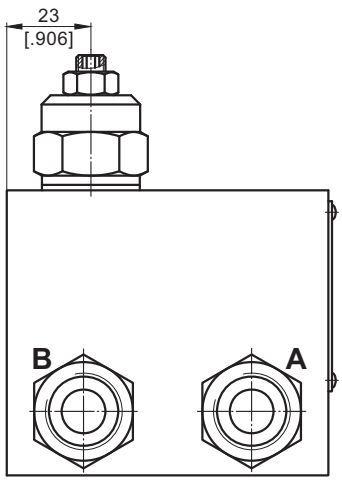

	Thread Ports - $P_{(A,B)}$	Thread Ports - D
-	G1/2 16 [.63] depth	G1/2 12 [.47] depth
M	M22x1,5 16 [.63] depth	M22x1,5 12 [.47] depth
A	7/8 - 14 UNF O-ring 16 [.63] depth	7/8 - 14 UNF O-ring 13 [.51] depth

mm [in]

Note: **KPDW** and **KPE..W** Blocks assembly to RW or HW motors is done with two screws (thread **D**) included in the valve set.
Tightening torque 8 daNm [710 lb-in].

CROSSOVER RELIEF VALVES

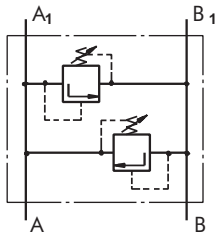

Dual Crossover Relief Valves type KPDHR... and KPDRK...

SPECIFICATION DATA

Parameters	Type					
	KPDHR			KPDRK		
Flow Rate, lpm [GPM]	60 [15.85]					
Pressure Range*, bar [PSI]	5÷40 [70÷580]	30÷100 [435÷1450]	80÷250 [1160÷3625]	10÷40 [145÷580]	30÷100 [435÷1450]	80÷250 [1160÷3625]
Weight, kg [lb]	2,420 [5.34]			1,600 [3.53]		

*Pressure Settings are at flow rate of 5 lpm [1.32 GPM] and viscosity 32 mm²/s [150 SUS] (50°C [122°F]).

VALVES for HP and HR HYDRAULIC MOTORS

DUAL VALVE KPDHR

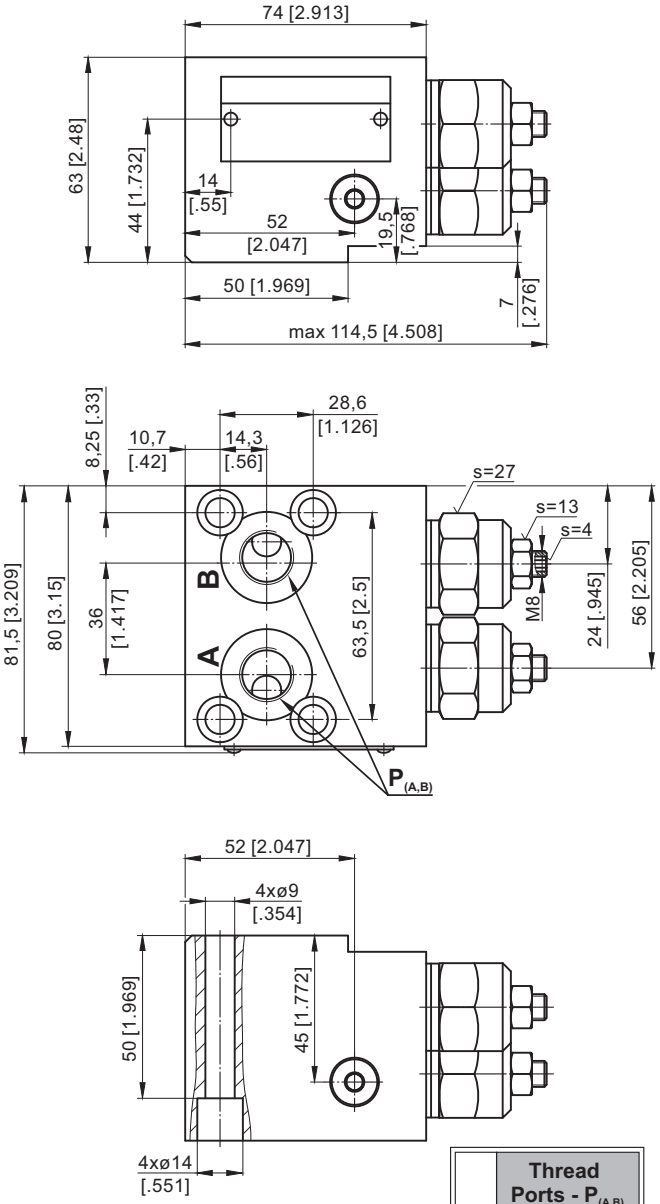

	Thread Ports - $P_{(A,B)}$
-	G3/8
M	M18x1,5
A	3/4 - 16 UNF

VALVES for RK HYDRAULIC MOTORS

DUAL VALVE KPDRK

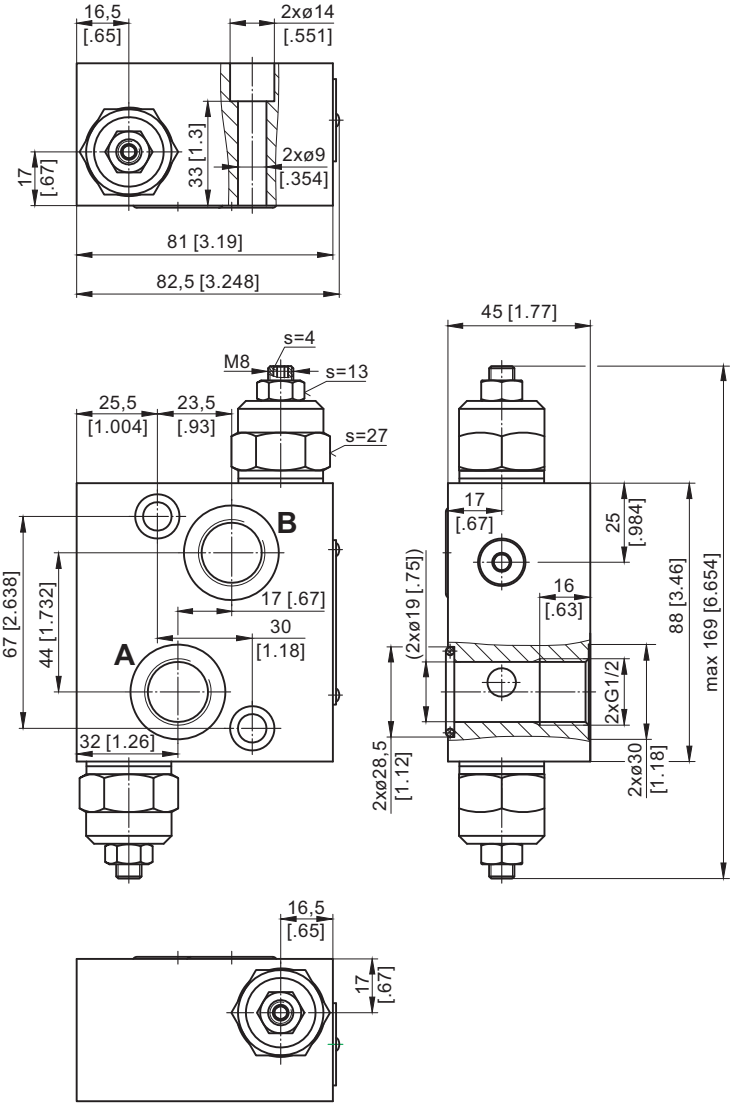

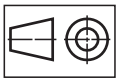

mm [in]

	Thread Ports - $P_{(A,B)}$
-	G1/2

ORDER CODE - OVERCENTER VALVES with BRAKE CONTROL

	1		2		3		4	5	6	7
K P B		-		/		/				

Pos.1 - Mounting Flange*

- **R** - Valve block for MP, MR and MH Motors
- **S** - Valve block for MS Motors
- **W** - Valve block for RW and HW Motors
- **T** - Valve block for MT Motors
- **V** - Valve block for MV Motors
- **HR** - Valve block for HP and HR Motors

Pos.2 - Pressure Range, bar [PSI]

- **250** - 70÷250 [1015÷3625], Std Setting 250bar@5 lpm

Pos.3 - Pilot Ratio

- **1** - 4,25:1

Pos.4 - Number of Valves

- **D** - Two Valves - Dual
- **E** - One Valve - Single (for R and S only)
- **AE** - One Valve on line A - Single (for T,V,W,HP and HR)
- **BE** - One Valve on line B - Single (for T,V,W,HP and HR)

Pos.5 - Threaded Ports

- omit - BSPP thread - ISO 228
- **M** - Metric thread - ISO 262
- **A** - Unified inch screw threads ANSI B 1.1 - 1982

Pos.6 - Option [Paint]**

- omit - no Paint
- **P** - Painted
- **PC** - Corrosio Protected Paint

Pos.7 - Design Series

- omit - Factory specified

Notes:

* For detailed information on mounting the valve on the various body types, refer to the corresponding “M+S”-catalog of hydraulic motors.

** Color at customer's request.

ORDER CODE - SWITCH VALVES

	1	2	3	4
K P W				

Pos.1 - Housing Type

- **R** - Valve block for MP, MR and MH Motors
- **S** - Valve block for MS Motors
- **T** - Valve block for MT Motors
- **V** - Valve block for MV Motors

Pos.2 - Threaded Ports

- omit - BSPP thread - ISO 228
- **M** - Metric thread - ISO 262
- **A** - Unified inch screw threads ANSI B 1.1 - 1982

Pos.3 - Option [Paint]*

- omit - no Paint
- **P** - Painted
- **PC** - Corrosio Protected Paint

Pos.4 - Design Series

- omit - Factory specified

Notes: * Color at customer's request.

The Valve Blocks are mangano phosphatized as standard.

ORDER CODE - CROSSOVER RELIEF VALVE

	1	2	3		4	5	6
K P				/			

Pos. 1 - Number of Valves

D	- Two Valves - Dual
E	- One Valve - Single (for R and S only)
AE	- One Valve on line A - Single (for T,V and W only)
BE	- One Valve on line B - Single (for T,V and W only)

Pos. 2 - Housing Type

R	- Valve block for MP, MR and MH Motors
S	- Valve block for MS Motors
W	- Valve block for RW and HW Motors
T	- Valve block for MT Motors
V	- Valve block for MV Motors

Pos. 3 - Presssure Range, bar [PSI]

100*	- 30÷100 [435÷1450], Std Setting 100 bar@5 lpm
210*	- 50÷210 [725÷3050], Std Setting 210 bar@5 lpm
300*	- 80÷300 [1160÷4350], Std Setting 250 bar@5 lpm
210**	- 80÷210 [1160÷3050], Std Setting 210 bar@5 lpm
100***	- 10÷100 [145÷1450], Std Setting 100 bar@5 lpm
250***	- 20÷250 [290÷3625], Std Setting 250 bar@5 lpm

Pos. 4 - Threaded Ports

omit	- BSPP thread - ISO 228
M	- Metric thread - ISO 262
A	- Unified inch screw threads ANSI B 1.1 - 1982

Pos. 5 - Option [Paint]**

omit	- no Paint
P	- Painted
PC	- Corrosion Protected Paint

Pos. 6 - Design Series

omit - Factory specified

Notes:
- * Useful for types **R** and **S** only.
- ** Useful for types **T** only.
- *** Useful for types **V** only.
- **** Color at customer's request.

ORDER CODE - CROSSOVER RELIEF VALVE

	1	2	3		4	5	6
K P				/			

Pos. 1 - Number of Valves

D	- Two Valves - Dual

Pos. 2 - Housing Type

HR	- Valve block for HR Motors
RK	- Valve block for RK and GHL Motors

Pos. 3 - Presssure Range, bar [PSI]

40	- 10÷ 40 [145÷ 580], Std Setting 100 bar@5 lpm
100	- 30÷100 [435÷1450], Std Setting 100 bar@5 lpm
250	- 80÷250 [1160÷3625], Std Setting 250 bar@5 lpm

Pos. 4 - Threaded Ports

omit	- BSPP thread - ISO 228
M	- Metric thread - ISO 262
A	- Unified inch screw threads ANSI B 1.1 - 1982

Pos. 5 - Option [Paint]**

omit	- no Paint
P	- Painted
PC	- Corrosion Protected Paint

Pos. 6 - Design Series

omit - Factory specified

Notes: * Color at customer's request.

The Valve Blocks are mangano phosphatized as standard.

MOTOR-BRAKE SPECIAL FEATURES

Special Feature Description	Order Code	Motor type						
		B/MR	BD/MR	MT/B	MT/BX	MTM/B	SW	TW
Low Leakage	LL	O	O	–	O	O	–	–
Low Speed Valving	LSV	O	O	–	O	O	–	–
Free Running	FR	–	O	–	–	O		–
Reinforced unit	HD	–	–	O	–	O	–	–
Reverse Rotation	R	O	O	O	O	O	–	–
Paint*	P	O	O	O	O	O	O	O
Corrosion Protected Paint*	PC	O	O	O	O	O	O	O
Special Paint**	PS	O	O	O	O	O	O	O
	PCS							
Check Valves		S	–	S***	S	–	S	S

O	Optional
–	Not applicable
S	Standard

* Colour at customer's request.
** Non painted feeding surfaces, colour at customer's request.
*** Without check valves for **"HD"** option.

⚠ For more information about HD option please contact with "M+S Hydraulic".

APPLICATION CALCULATION

VEHICLE DRIVE CALCULATIONS

1. Motor speed: n [RPM]

$$n=\frac{2.65 \times V_{km} \times i}{R_m} \qquad n=\frac{168 \times V_{ml} \times i}{R_{in}}$$

v_{km} - vehicle speed, km/h;
v_{ml} - vehicle speed, mil/h;
R_m - wheel rolling radius, m;
R_{in} - wheel rolling radius, in;
i - gear ratio between motor and wheels. If no gearbox, use i=1.

2. Rolling resistance: RR, daN [lbs]

The resistance force resulted in wheels contact with different surfaces:

$$RR=G \times \rho$$

G - total weight loaded on vehicle, daN [lbs];
ρ - rolling resistance coefficient (Table 1).

Table 1

Rolling resistance coefficient In case of rubber tire rolling on different surfaces	
Surface	ρ
Concrete- faultless	0.010
Concrete- good	0.015
Concrete- bad	0.020
Asphalt- faultless	0.012
Asphalt- good	0.017
Asphalt- bad	0.022
Macadam- faultless	0.015
Macadam- good	0.022
Macadam- bad	0.037
Snow- 5 cm	0.025
Snow- 10 cm	0.037
Polluted covering- smooth	0.025
Polluted covering- sandy	0.040
Mud	0.037÷0.150
Sand- Gravel	0.060÷0.150
Sand- loose	0.160÷0.300

3. Grade resistance: GR, daN [lbs]

$$GR=G \times (\sin\alpha + \rho \times \cos\alpha)$$

α - gradient negotiation angle (Table 2).

Table 2

Grade %	α Degrees	Grade %	α Degrees
1%	0º 35'	12%	6º 5'
2%	1º 9'	15%	8º 31'
5%	2º 51'	20%	11º 19'
6%	3º 26'	25%	14º 3'
8%	4º 35'	32%	18º
10%	5º 43'	60%	31º

4. Accelerarion force: FA, daN [lbs]

Force **FA** necessary for acceleration from 0 to maximum speed **v** and time **t** can be calculated with a formula:

$$FA=\frac{V_{km} \times G}{36 \times t}, \text{[daN]} \qquad FA=\frac{V_{ml} \times G}{22 \times t}, \text{[lbs]}$$

FA - acceleration force, daN [lbs];
t - time, [s]

5. Tractive effort: DP, daN [lbs]

Tractive effort **DP** is the additional force of trailer. This value will be established as follows:
- acc. to constructor's assessment;
- as calculating forces in items 2, 3 and 4 of trailer; the calculated sum corresponds to the tractive effort requested.

6. Total tractive effort: TE, daN [lbs]

Total tractive effort **TE** is total effort necessary for vehicle motion; that the sum of forces calculated in items from 2 to 5 and increased with 10% because of air resistance.

$$TE=1,1 \times (RR + GR + FA + DP)$$

RR - force acquired to overcome the rolling resistance;
GR - force acquired to slope upwards;
FA - force acquired to accelerate (acceleration force);
DP - additional tractive effort (trailer).

7. Motor Torque moment: M, daNm [lb-in]

Necessary torque moment for every hydraulic motor:

$$M=\frac{TE \times R_m [R_{in}]}{N \times i \times \eta_M}$$

N - motor numbers;
η_M - mechanical gear efficiency (if it is available).

8. Cohesion between tire and road covering: M_W, daNm [lb-in]

Necessary torque moment for every hydraulic motor:

$$M_W=\frac{G_W \times f \times R_m [R_{in}]}{i \times \eta_M}$$

To avoid wheel slipping, the following condition should be observed $M_W>M$

f - frictional factor;
G_W - total weight over the wheels, daN [lbs].

Table 3

Surface	Frictional factor f
Steel on steel	0.15 ÷ 0.20
Rubber tire on polluted surface	0.5 ÷ 0.7
Rubber tire on asphalt	0.8 ÷ 1.0
Rubber tire on concrete	0.8 ÷ 1.0
Rubber tire on grass	0.4

9. Radial motor loading: P_{rad}, daN [lbs]

When motor is used for vehicle motion with wheels mounted directly on motor shaft, the total radial loading of motor shaft Prad is a sum of motion force and weight force acting on one wheel.

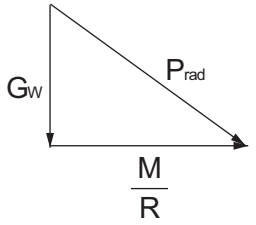

$$P_{rad}=\sqrt{G_w^2+\left(\frac{M}{R}\right)^2}$$

G_w - weight held by wheel;
P_{rad} - total radial loading of motor shaft;
M/R - motion force.

In accordance with calculated loadings the suitable motor from the catalogue is selected.

DRAINAGE SPACE AND DRAINAGE PRESSURE

Advantages in oil drainage from drain space: Cleaning; Cooling and Seal lifetime prolonging.

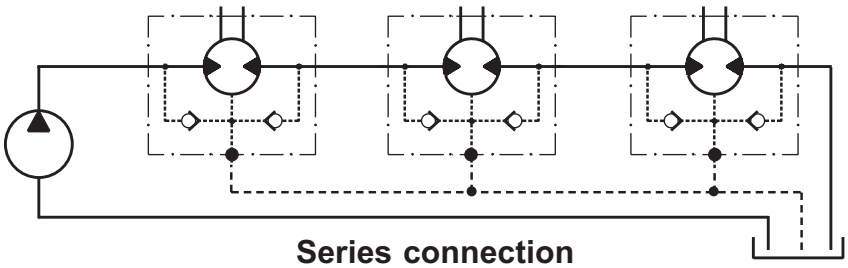

Series connection

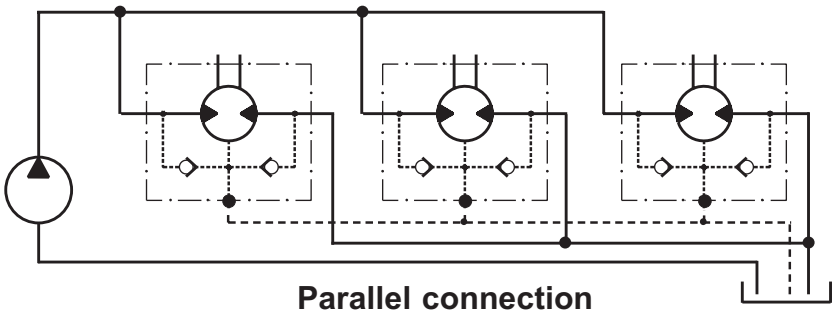

Parallel connection

WARRANTY

M+S Hydraulic warrants, that its products, supplied directly to original equipment manufacturer, authorized distributor or other customer, will be free of defects in material or workmanship at the time of shipment from M+S Hydraulic and will conform to the products technical documentation (drawings and specifications) under sale agreement with Buyer.

This warranty will apply only to defects appearing within applicable Warranty period, mentioned below. If Buyer notifies M+S Hydraulic within the Warranty period about any such defects, M+S, at its sole option will replace or repair the defective products or their parts found by M+S Hydraulic to be defective in material or workmanship.

THE FOREGOING LIMITED WARRANTY IS AVAILABLE ONLY IF “M+S HYDRAULIC” IS PROMPTLY NOTIFIED IN WRITTEN OF THE ALLEGED DEFECT AND DOES NOT COVER FAILURE TO FUNCTION CAUSED BY DAMAGE TO THE PRODUCT, IMPROPER INSTALLATION, UNREASONABLE USE OR ABUSE OF THE PRODUCT, FAILURE TO PROVIDE OR USE OF IMPROPER MAINTENANCE OR USUAL, DEGRADATION OF THE PRODUCT DUE TO PHYSICAL ENVIRONMENTS OF AN USUAL NATURE. THE FOREGOING REMEDIES ARE THE SOLE AND EXCLUSIVE REMEDIES AVAILABLE TO CUSTOMER. To facilitate the inspection, M+S Hydraulic may require return of the product/part, which Buyer claims to be defective.

M+S Hydraulic shall not be liable for labor costs or any other expenses incurred during the disassembling or reinstalling of the product/part.

In case the claimed products are returned to M+S Hydraulic in bad condition: dirty, disassembled, with damaged or missing parts during transportation, the warranty will be considered as not applicable and the products will not be liable to repair.

Warranty periods

New products: The Warranty period is limited to 24 consecutive months (2 years) from the date of production of the product.

Repaired products: If the product is repaired in M+S Hydraulic during its warranty period, the warranty period of the repaired item shall continue for the balance of original Warranty period or for a period equal to 50% of the original new product Warranty period, whichever is later.

Spare parts: The Warranty period for Spare parts is 12 consecutive months (1 year) from the dispatch date of such parts from M+S Hydraulic.

LIMITATION OF LIABILITY M+S Hydraulic's liability for claim of any kind, for loss or damage arising out of, connected with or resulting from an order, or from the performance or branch thereof, or from the design, manufacture, sale delivery, operation or use of any of its products shall be limited to, at M+S 's sole option, replacement, repair of any defective product or the issuance of a credit to Customer against any future purchases. Cash refunds will not be made under any circumstances and Customer will not be entitled to recover any damages of any kind against M+S Hydraulic, including but not limited to incidental or consequential damages, whether direct or indirect, known or unknown, foreseen or unforeseen.

M+S HYDRAULIC

68, Kozloduy St., 6100 Kazanlak, Bulgaria
Tel.: ++359 431 65167
++359 431 64271
Fax: +359 431 64114
E-Mail: msh@ms-hydraulic.com
URL: http://www.ms-hydraulic.com