TÜVRheinland® CERT ISO 9001

M+S HYDRAULIC

HYDRAULIC BRAKES MOTOR-BRAKES & VALVE BLOCKS

SAE version

ACCESSORIES and MOTOR-BRAKES

CONTENTS

Page

- Hydraulic Disc Brake for MLHP, MLHR and MLHS type LB/288 3
- Hydraulic Disc Brake for MLHSS type LBS/289(290) and MLHSV type LBV/289(290) 6
- Hydraulic Disc Brake for MLHTS type LBS/314(315) and MLHTV type LBV/314(315) 10
- Hydraulic Disc Brake type B...R 17
- Hydraulic Disc Brake type B...T 18
- Hydraulic Motor-brakes type B/HR 19
- Hydraulic Motor-Brakes type RWB 23
- Hydraulic Motor-brakes type SW 28
- Hydraulic Motor-brakes type TW 31
- Overcenter Valves with Brake Control 34
- Switch Valves 42
- Crossover Relief Valves 44
- Cross Port Relief Valves 52
- Motor-Brakes Special Features 55
- Application Calculation 56

“M+S HYDRAULIC” can accept no responsibility for possible errors in catalogues, brochures and other printed material.
“M+S HYDRAULIC” reserves the right to alter its products without notice. This also applies to products already on order provided that such alterations can be made without subsequential changes being necessary in specifications already agreed.

HYDRAULIC DISC BRAKES LB, LBS, LBV - Wet

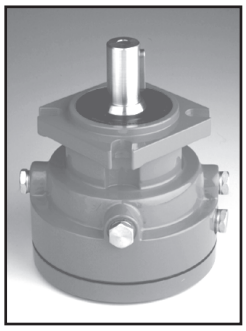

APPLICATION

» Heavy Duty machinery
» Wheel drives
» Material handling
» Mining
» Agricultural machines
» Conveyors
» Door openers and swing drives etc.

GENERAL

Fluid type	Mineral based- HLP(DIN 51524) or HM(ISO 6743/4)
Temperature range, ^{o}F [^{o}C]	-40÷284 [-430÷140]
Viscosity range, SUS [mm^2/s]	98÷347 [20÷75]
Filtration	ISO code 20/16 (nominal filtration of 25 microns)
Maintenance	Changed after the first 50-100 h, then after every 500-1500 h.

CONTENTS

Hydraulic Disc Brake for MLHP, MLHR and MLHS Motors type LB/288 … 4÷5
Hydraulic Disc Brake for MLHSS type LBS/289 6
Hydraulic Disc Brake for MLHSV type LBV/289 7
Hydraulic Disc Brake for MLHSS type LBS/290 8
Hydraulic Disc Brake for MLHSV type LBV/290 9
Output Shafts Extensions for LBS(LBV)/289, 290 10
Load curve for LBS(LBV)/289, 290 10
Order code for LB.../288... 11
Hydraulic Disc Brake for MLHTS type LBS/314 12
Hydraulic Disc Brake for MLHTS type LBS/315 13
Load curve for LBS(LBV)/314, 315 13
Hydraulic Disc Brake for MLHTV type LBV/314, 315 14
Output Shafts Extensions for LBS(LBV)/314, 315 15
Internal Spline Data 15
Order Code 16

LB, LBS

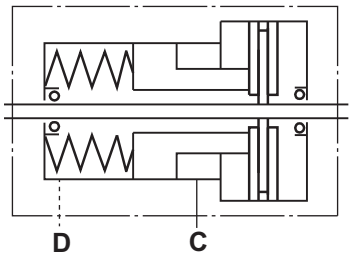

LBV

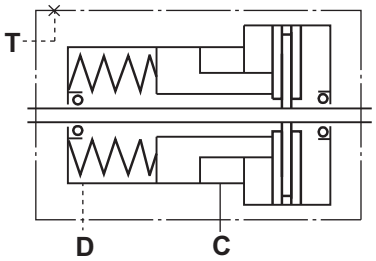

HYDRAULIC DISC BRAKE TYPE LB.../288...

FOR FLANGE ATTACHMENT TO MLHP, MLHR AND MLHS HYDRAULIC MOTORS

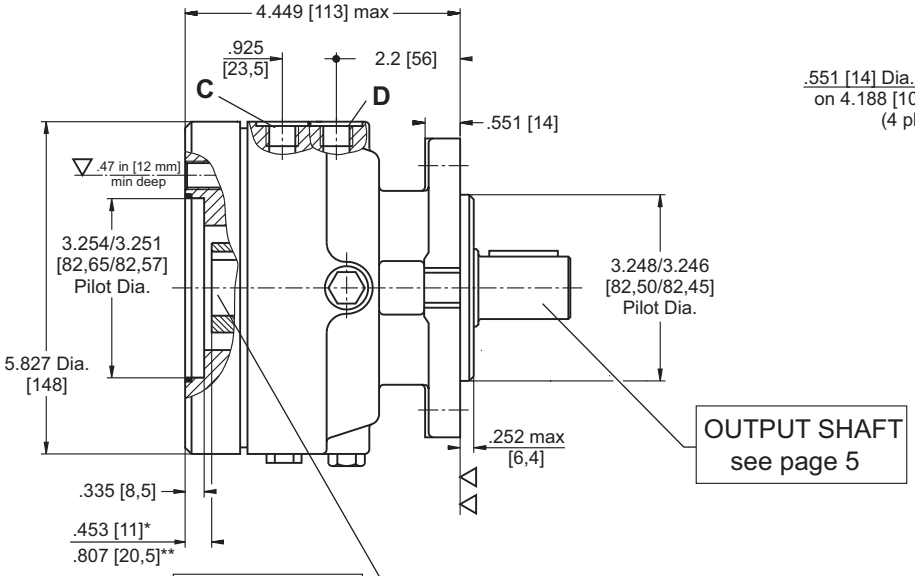

OUTPUT FACE

A SAE A Mount

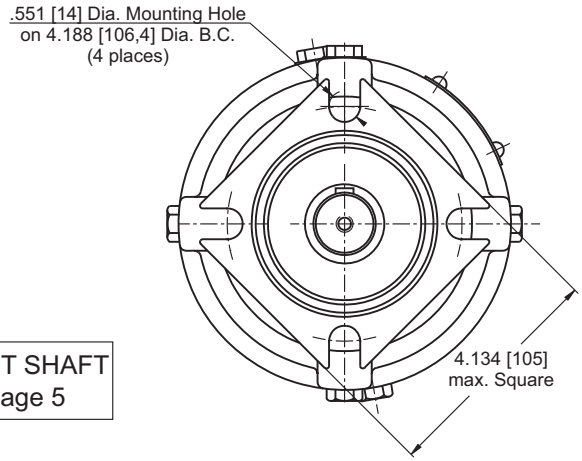

INPUT SHAFT
see page 5

C : Brake release Port- 7/16 - 20UNF, deep .47 [12]
D : Drainage tap- 9/16 - 18UNF, deep .51 [13]

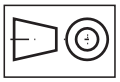

in [mm]

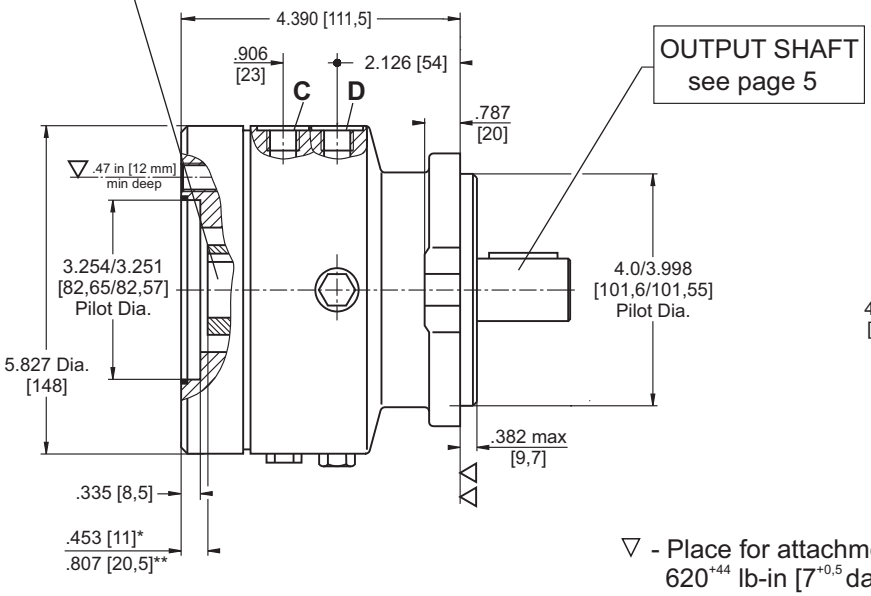

B SAE B Mount

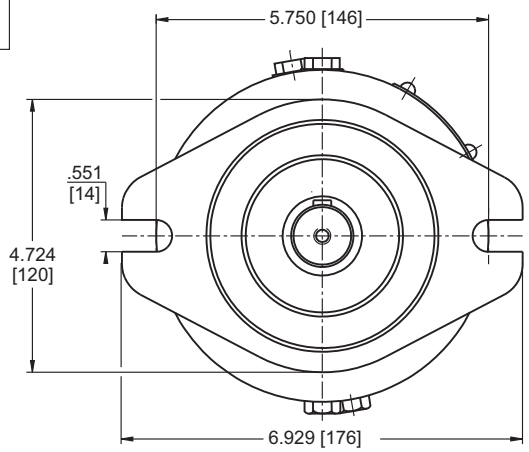

▽ - Place for attachment (tightening torque for screw 1/2" - 13 UNC: 620^{+44} lb-in [$7^{+0,5}$ daNm])
▽▽ - Place for attachment
* - for Input Shaft Hole Versions "**C**"
** - for Input Shaft Hole Versions "**S**" and "**G**"

SPECIFICATION DATA

Description LB../288...		7	14	21	32	43	63
*** Min. Static Torque, lb-in [daNm]		531-708 [6-8]	1150-1327 [13-15]	1770-1947 [20-22]	2743-3009 [31-34]	3628-3982 [41-45]	5399-5665 [61-64]
Opening Pressure, PSI [bar]	min	58-73 [4-5]	116-130 [8-9]	174-188 [12-13]	260-290 [18-20]	348-377 [24-26]	550-565 [38-39]
	max	4350 [300]					
Min. oil quantity for brake releasing, in³ [cm³]		.427 - .488 [7 - 8]					
Oil volume, in³ [cm³]		3.5 - 7.35 [50 - 120]					
Max. Pressure in drain space, PSI [bar]		7.25 [0,5]					
Weight lb [kg]		19.8 [9]					

*** Static torque is obtained at working pressure - 0 PSI [0 bar].

INPUT SHAFT HOLES for LB.../288

C

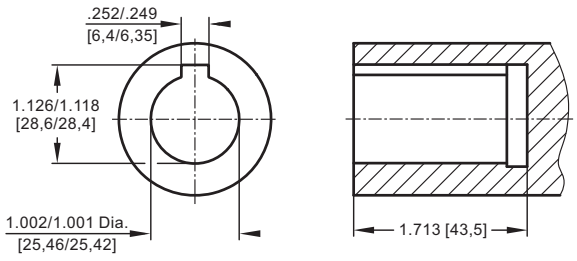

G

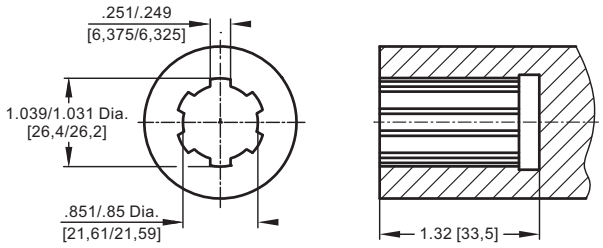

S

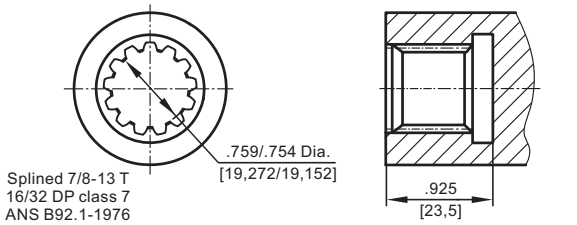

OUTPUT SHAFT EXTENSIONS for LB.../288

C

1"[25,4] straight, Parallel key ¼"x¼"x1¼" BS 46
Max. Torque 3900 lb-in [44 daNm]

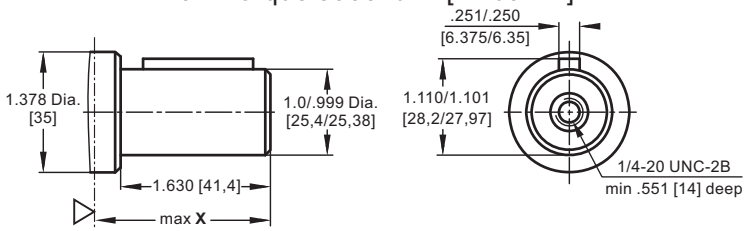

G

1"[25,4], SAE 6B Splined
Max. Torque 3900 lb-in [44 daNm]

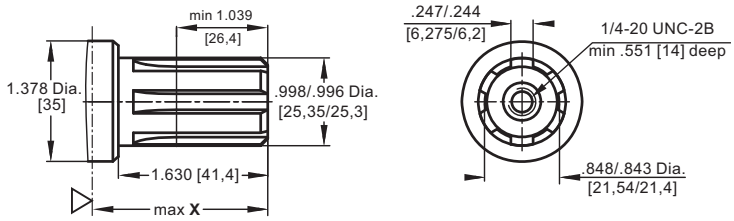

S

13T Splined 7/8"[22,22], ANS B92.1-1976
Max. Torque 3200 lb-in [36 daNm]

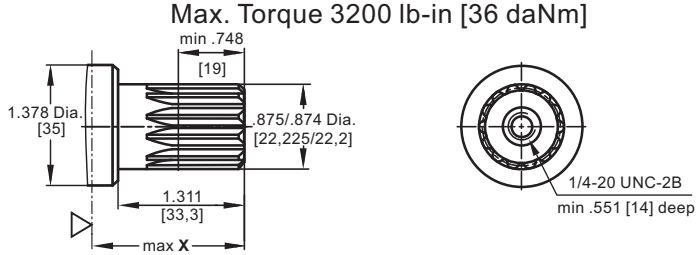

▽ - Disc Brake Mounting Surface

X	LBA/...	LBB/...
For LB/288...-C	1.95 in [49,5 mm]	2.03 in [51,5 mm]
For LB/288...-S	1.65 in [42,0 mm]	1.73 in [44,0 mm]
For LB/288...-G	1.95 in [49,5 mm]	2.03 in [51,5 mm]

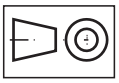

in [mm]

INPUT FACE

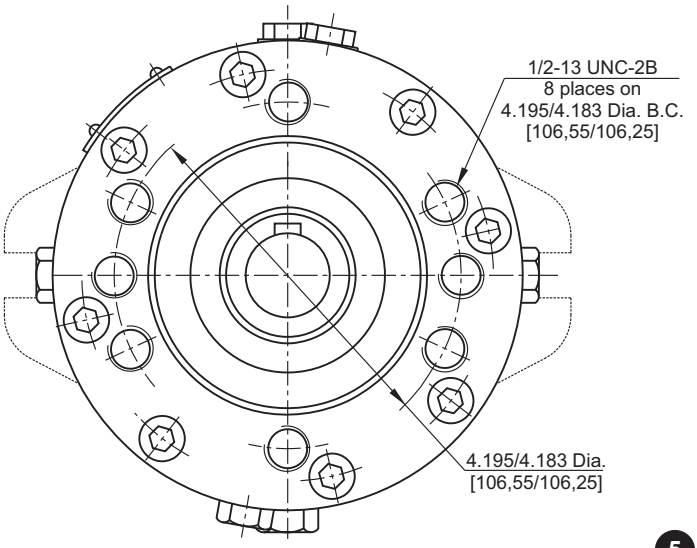

LOAD CURVE

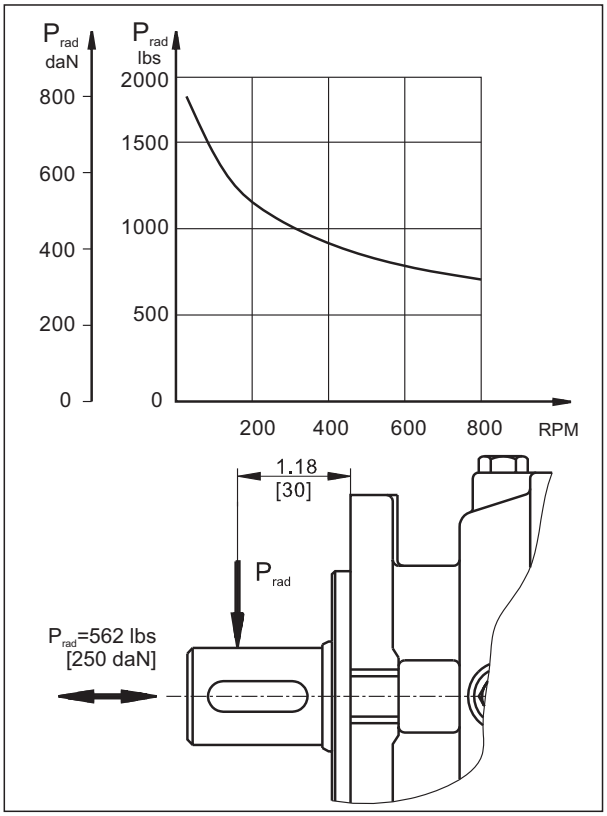

HYDRAULIC DISC BRAKE TYPE LBS.../289...
FOR FLANGE ATTACHMENT TO MLHSS HYDRAULIC MOTORS

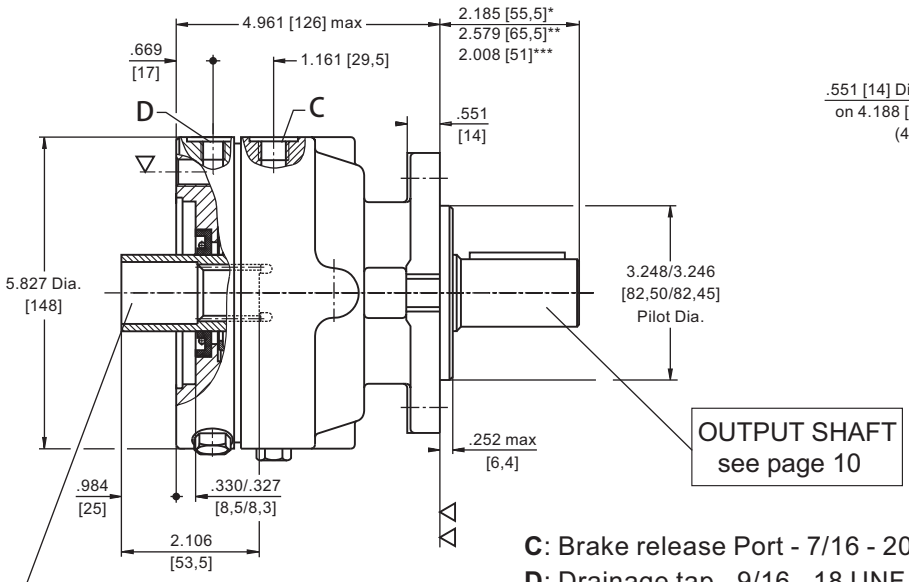

OUTPUT SHAFT
see page 10

INPUT SHAFT
see page 16

OUTPUT FACE

A SAE A Mount

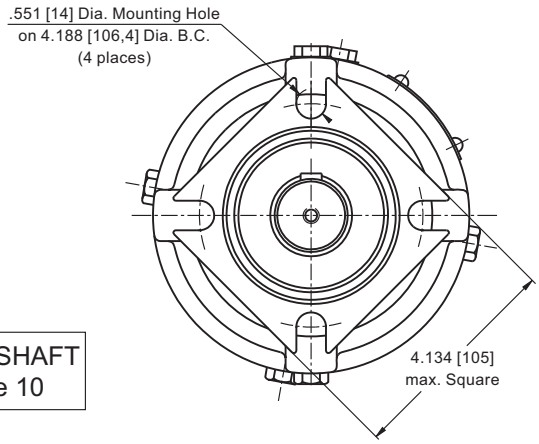

C: Brake release Port - 7/16 - 20 UNF, .47 [12] depth

D: Drainage tap - 9/16 - 18 UNF, .51 [13] depth

* For Output Shaft Version **C**,**G**

** For Output Shaft Version **T**

*** For Output Shaft Version **S**

in [mm]

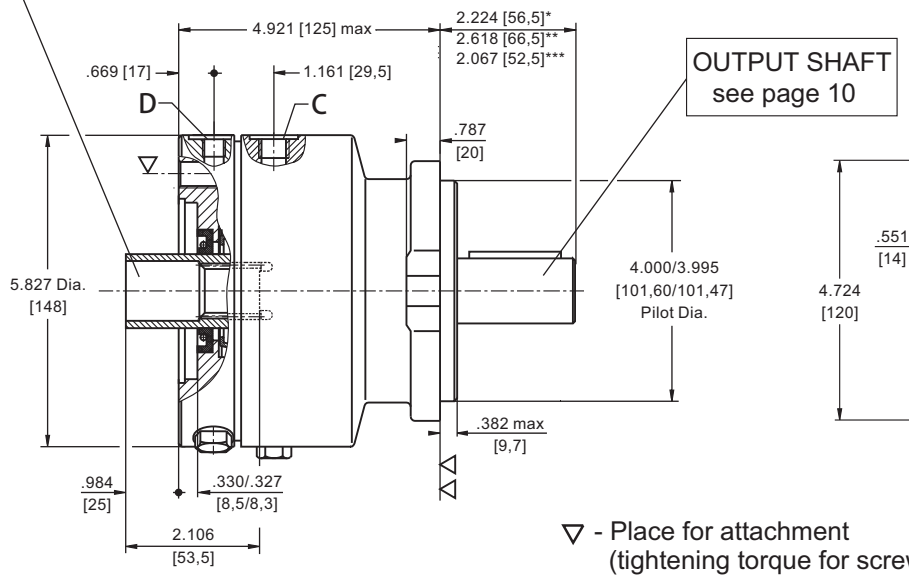

OUTPUT SHAFT
see page 10

B SAE B Mount

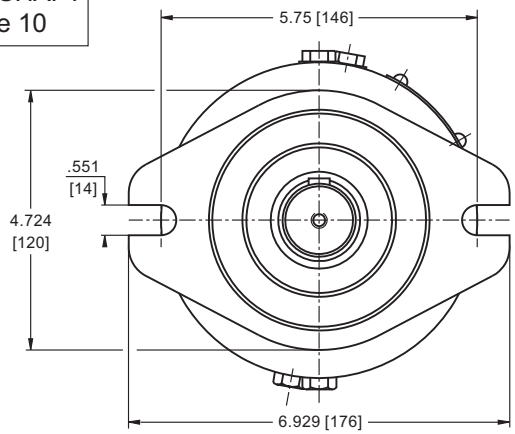

▽ - Place for attachment
(tightening torque for screws 4x1/2" - 13 UNC,
1¼ in [31,8 mm] long, ANSI B 18.3-76: 710^{+44} lb-in [$8^{+0,5}$ daNm])

▽▽ - Place for attachment

SPECIFICATION DATA

Description LBS(LBV).../289(290)		21	32	43	63	L43	L63
*Min. Static Torque lb-in [daNm]		1770-1947[20-22]	2743-3009[31-34]	3628-3982[41-45]	5399-5665[61-64]	3628-3982[41-45]	5399-5665[61-64]
Opening Pressure PSI [bar]	min	174-188 [12-13]	260-290 [18-20]	348-377 [24-26]	540-565 [37-39]	290-320 [20-22]	305-333 [21-23]
	max	4350 [300]					
Min. oil quantity for brake releasing	in^3 [cm^3]	.427- .488 [7- 8]					
Oil volume	in^3 [cm^3]	3.05-7.32 [50-120]					
Max. Pressure in drain space	PSI [bar]	72 [5]					
Weight for .../289 .../290	lb [kg]	22 [10] 24.2 [11]					

*Static torque is obtained at working pressure - 0 PSI [0 bar].

HYDRAULIC DISC BRAKE TYPE LBV.../289...
FOR FLANGE ATTACHMENT TO MLHSV HYDRAULIC MOTORS

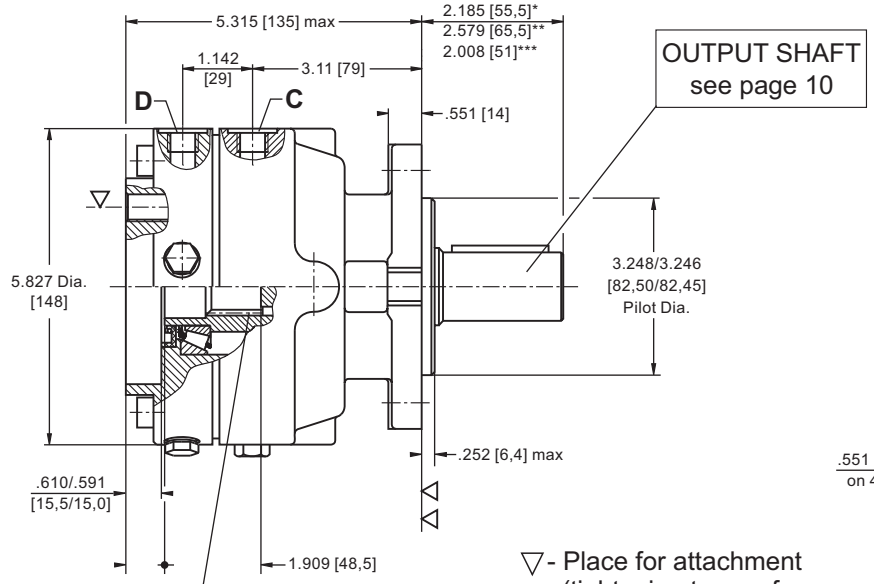

OUTPUT FACE

A SAE A Mount

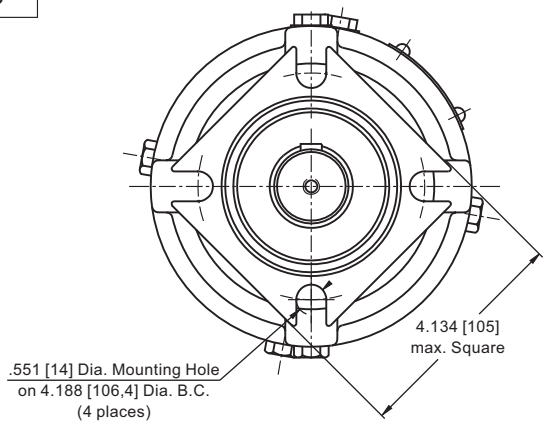

▽- Place for attachment
(tightening torque for screws 4xM10 DIN 912 - 575^{+44} lb-in [6,5$^{+0,5}$ daNm])

▽▽- Place for attachment

C: Brake release Port - 7/16 - 20 UNF, .47 [12] depth

D: Drainage tap - 9/16 - 18 UNF, .51 [13] depth

INPUT SHAFT
see page 16

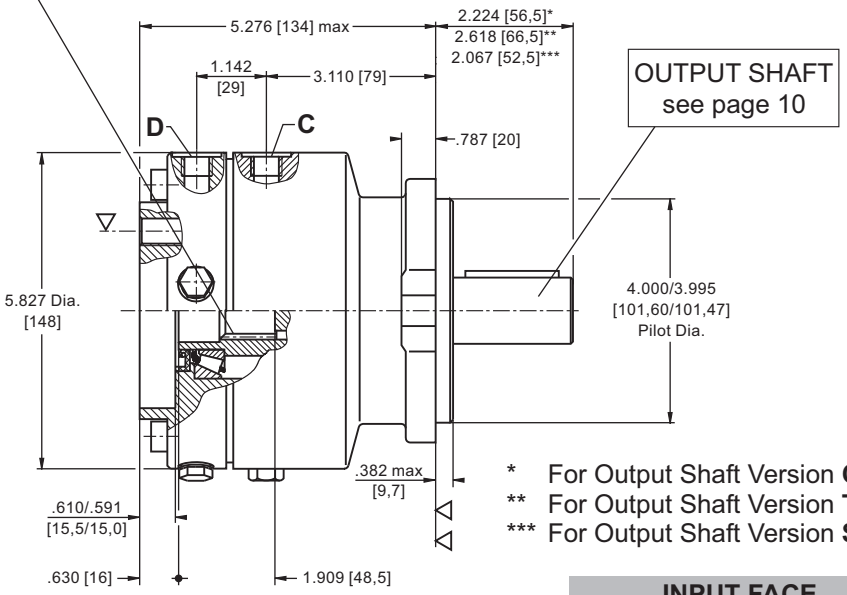

B SAE B Mount

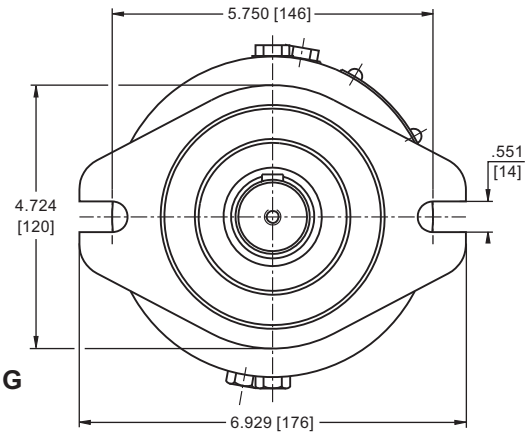

* For Output Shaft Version **C**,**G**

** For Output Shaft Version **T**

*** For Output Shaft Version **S**

INPUT FACE
For Versions 289 and 290

TYPE LBS.../...

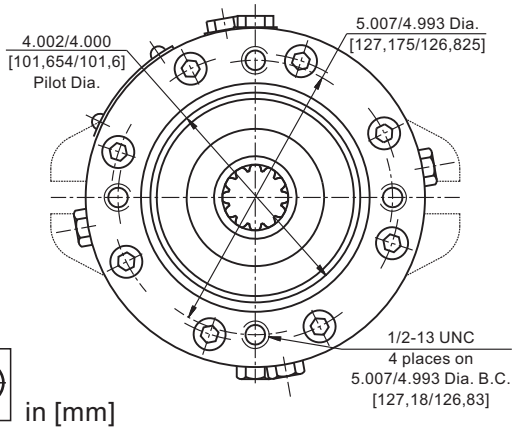

TYPE LBV.../...

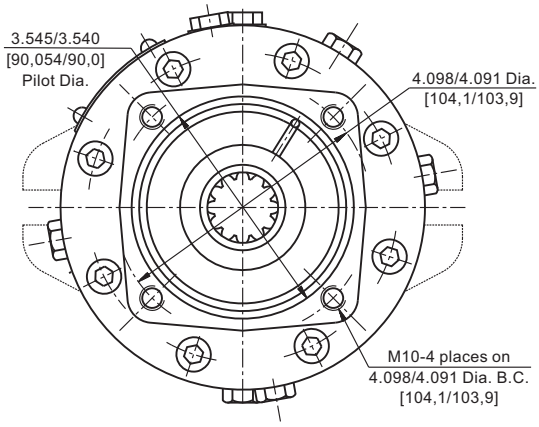

in [mm]

HYDRAULIC DISC BRAKE TYPE LBS.../290...
FOR FLANGE ATTACHMENT TO MLHSS HYDRAULIC MOTORS

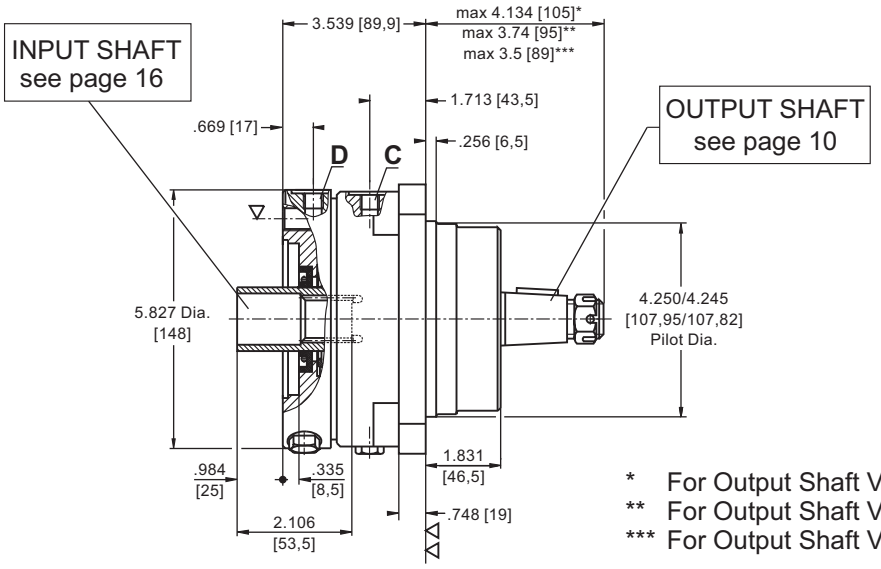

* For Output Shaft Version **T**
** For Output Shaft Version **C**,**G**
*** For Output Shaft Version **S**

OUTPUT FACE

E Wheel Mount

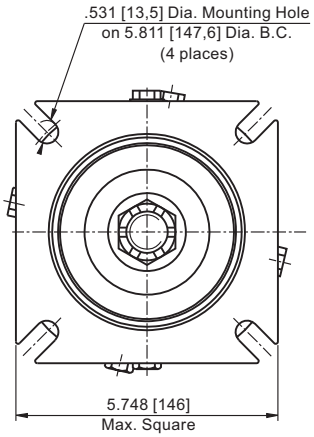

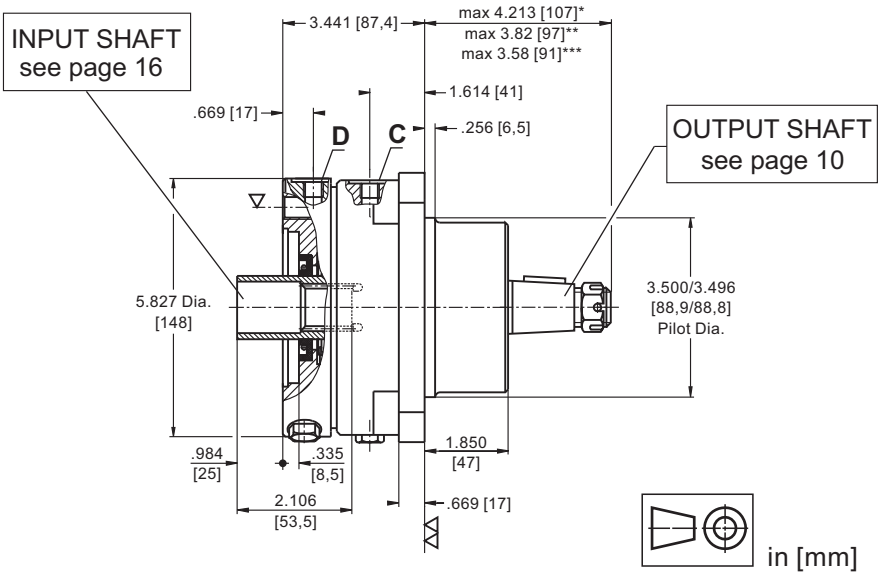

in [mm]

R Wheel Mount

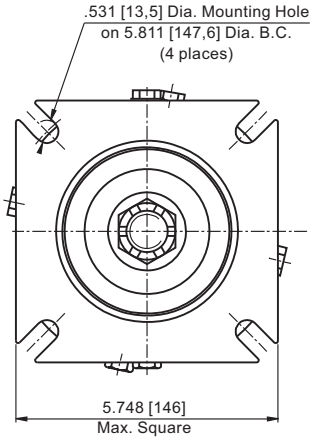

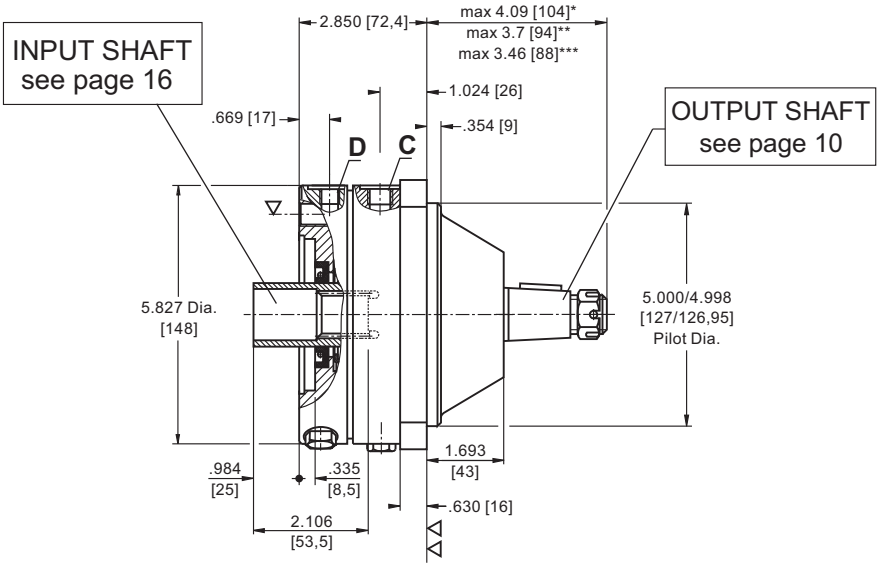

W SAE C Wheel Mount

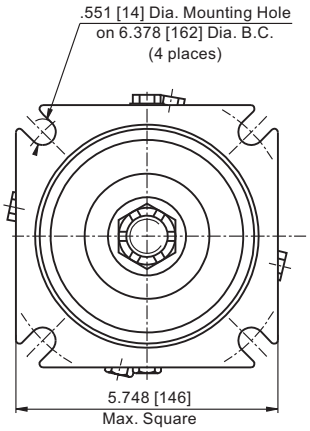

C: Brake release Port - 7/16 - 20 UNF, .47 [12] depth
D: Drain plug for the Brake - 9/16 - 18 UNF, .51 [13] depth
T: Drain plug for the Motor - 9/16-18 UNF, .51 [13] depth

▽ - Place for attachment (tightening torque for screws 4x1/2" - 13 UNC, 1¼ in [31,8 mm] long, ANSI B 18.3-76: 710^{+44} lb-in [$8^{+0,5}$ daNm])
▽▽ - Place for attachment

HYDRAULIC DISC BRAKE TYPE LBV.../290...
FOR FLANGE ATTACHMENT TO MLHSV HYDRAULIC MOTORS

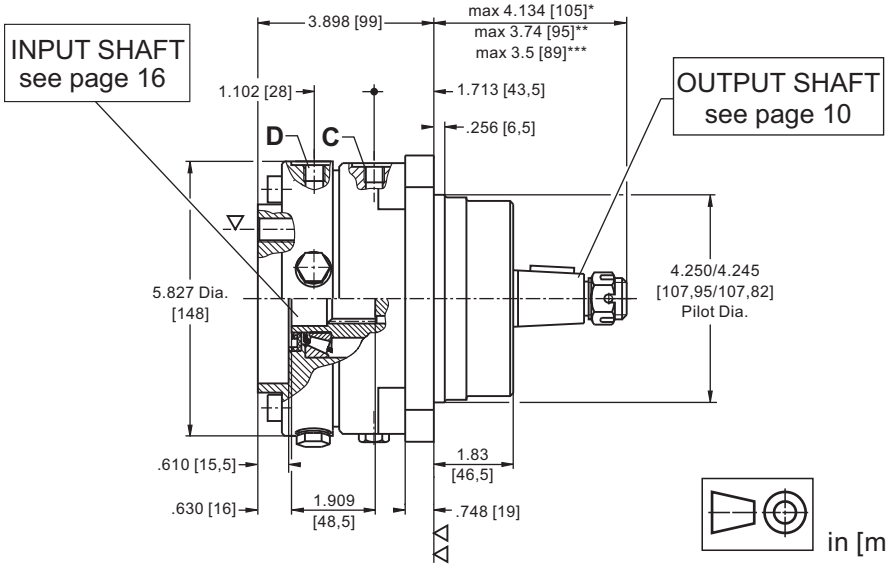

in [mm]

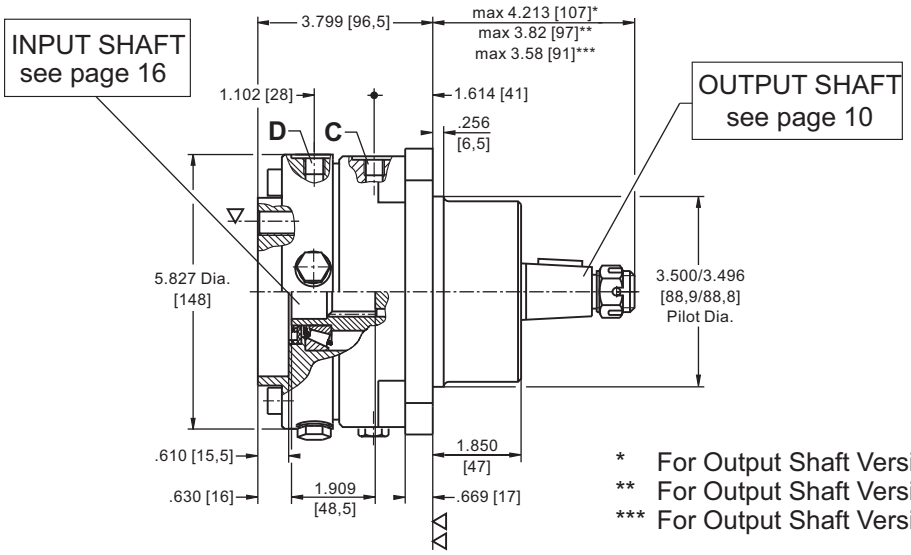

* For Output Shaft Version **T**
** For Output Shaft Version **C**,**G**
*** For Output Shaft Version **S**

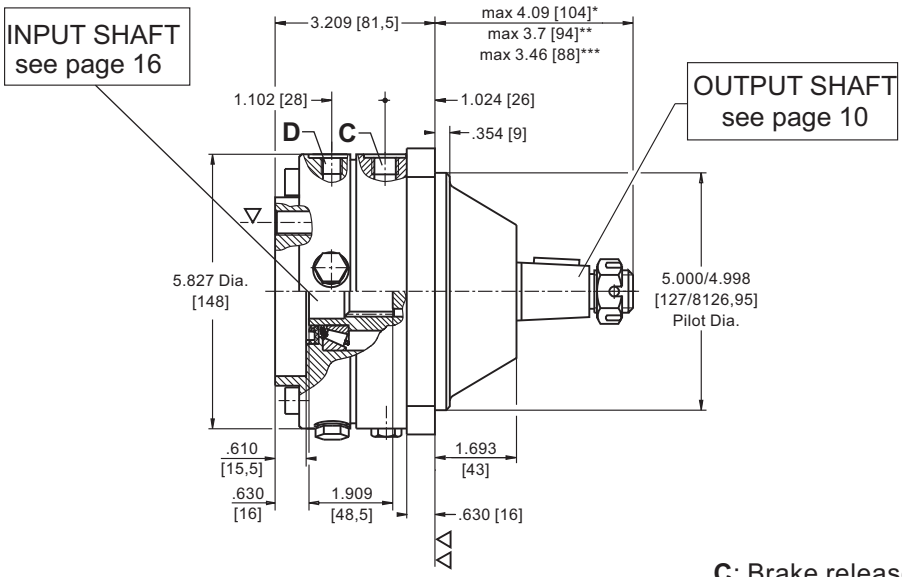

▽ - Place for attachment (tightening torque for screws 4xM10 DIN 912 - 575^{+44} lb-in [$6{,}5^{+0{,}5}$ daNm])

▽▽ - Place for attachment

C: Brake release Port - 7/16 - 20 UNF, .47 [12] depth
D: Drain plug for the Brake - 9/16 - 18 UNF, .51 [13] depth
T: Drain plug for the Motor - 9/16-18 UNF, .51 [13] depth

OUTPUT FACE

E Wheel Mount

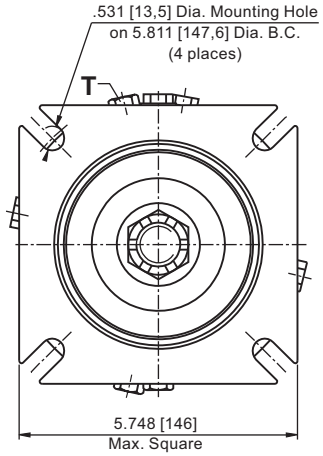

R Wheel Mount

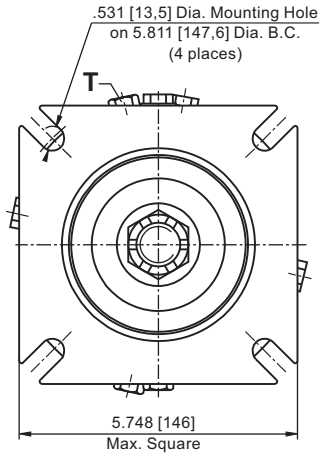

W SAE C Wheel Mount

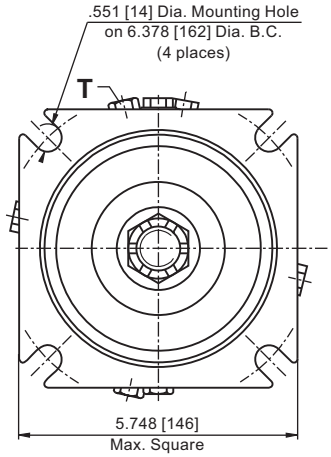

OUTPUT SHAFT EXTENSIONS for LB.../289, 290

C

1¼"[31,75]straight, Parallel key 5/16" x 5/16" x 1¼" BS 46
Max. Torque 6815 lb-in [77 daNm]

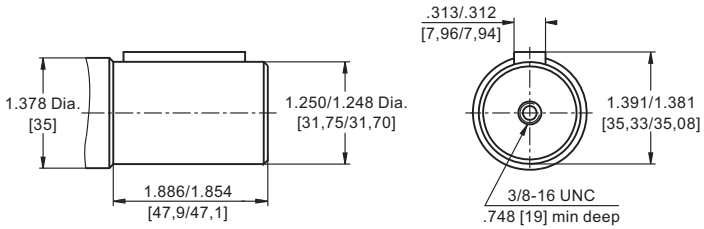

G

14T Splined, 1¼" [31,75], ANS B92.1-1976
Max.Torque 6815 lb-in [77 daNm]

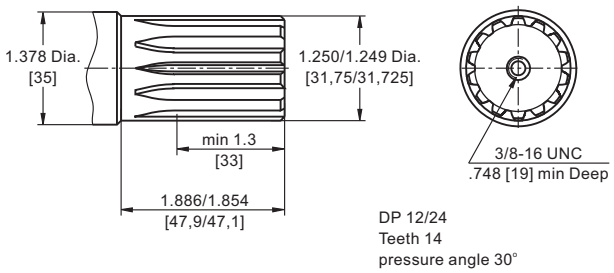

T

1¼"[31,75], SAE J501 Tapered
Parallel key 5/16" x 5/16" x 1" BS46
Max. Torque 6815 lb-in [77 daNm]

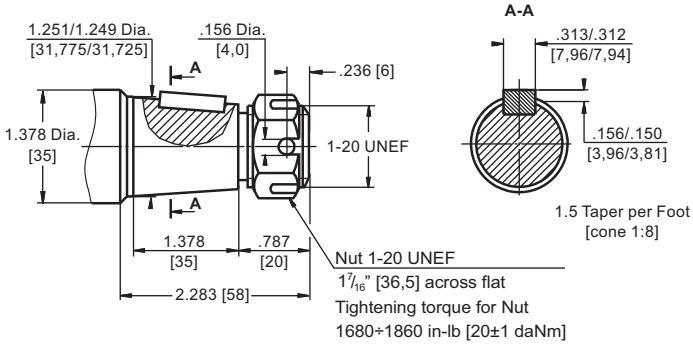

S

1" [25,4], SAE 6B Splined
Max. Torque 3900 lb-in [44 daNm]

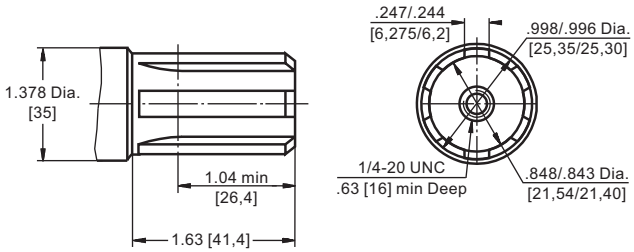

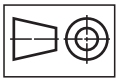

in [mm]

LOAD CURVE

The curve applies to a B10 bearing life of 3000 hours at 200 RPM

1: Pa<350 daN [787 lbs]
2: Pa=500 daN [1125 lbs]

LBS(V).../289

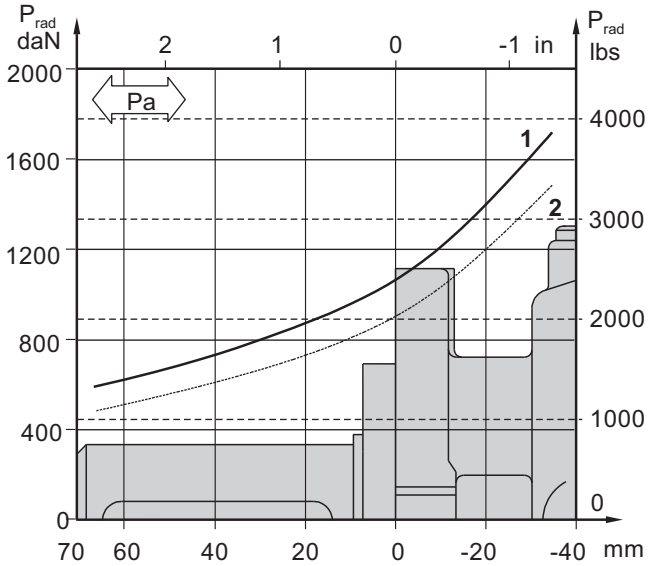

LBS(V).../290

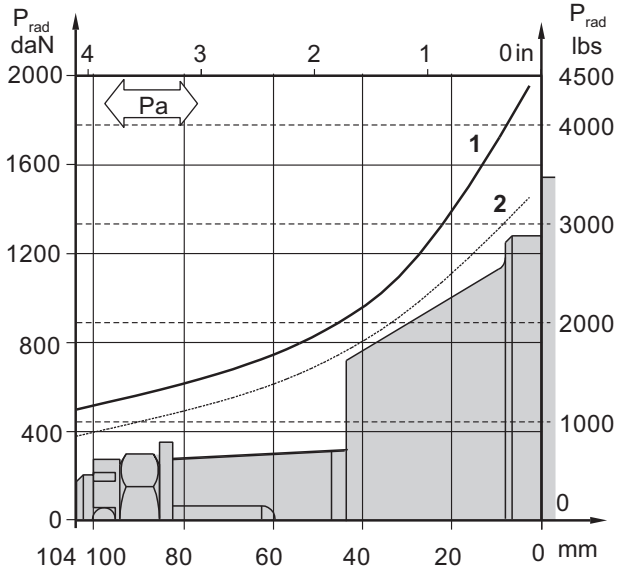

ORDER CODE for LB/288

1	2	3	4	5	6
L B	/288	-			

Pos.1 - Output Face

A	- SAE A Mount
B	- SAE B Mount

Pos.2 - Input Shaft Holes [see slots of page 5 left]

C, G, S

Pos.3 - Static Torque Code [see Specification Data]

7, 14, 21, 32, 43, 63

Pos.2 - Output Shaft Extensions* [see page 5]

C	- 1" [25,4] straight, Parallel key
G	- 1" [25,4] SAE 6B Splined
S	- $^{7}/_{8}$" [22,2] 13T Splined

Pos.5 - Option** [Paint]

omit - no Paint

P	- Paint
PC	- Corrosion Protected Paint

Pos.6 - Design Series

omit - Factory specified

*Notes: * For Max. Torque values see data on page 5.*
The permissible output torque for shafts must not be exceeded!
*** Color at customer's request.*

ORDER CODE for LBS(LBV)/289 and 290

1	2	3	4	5	6	7
L B		/	-			

Pos.1 - Type

S	- Disc Brake for short motor S- MLHSS
V	- Disc Brake for very short motor V- MLHSV

Pos.2 - Output Face

A	- SAE A Mount
B	- SAE B Mount
E	- Wheel Mount
R	- Wheel Mount
W	- SAE C Wheel Mount

Pos.3 - Designe Code

289	- for MLHSS and MLHSV Motors
290	- for MLHSS and MLHSV Motors [Wheel Mounting Motors]

Pos.4 - Static Torque Code [see Specification Data]

21, 32, 43, 63, L43, L63

Pos.5 - Output Shaft Extensions* [see page 10]

C	- 1¼" [31,75] straight, Parallel key
G	- 1¼" [31,75] 14T Splined
S	- 1" [25,4] SAE 6B Splined
T	- 1¼" [31,75] SAE J501 Tapered

Pos.6 - Option [Paint]**

omit - no Paint

P	- Painted
PC	- Corrosion Protected Paint

Pos.7 - Design Series

omit - Factory specified

*Notes: * For Max. Torque values see data on page 10. The permissible output torque for shafts must not be exceeded!*
*** Color at customer's request.*

The Disc Brakes are mangano phosphatized as standard.

ATTENTION:
1. Hydraulic brake is delivered without oil (it is lubricated only).
2. Hydraulic brake is filled through the drain port **D**. Space is filled with 3.05 ÷ 7.32 in^3 [50 ÷ 120 cm^3] mineral oil HLP (DIN 51524) or HM (ISO 6743/4). For LB/288 fill oil after hydraulic motor assembly.
3. In all brakes, friction discs and separators should be lubricated.

HYDRAULIC DISC BRAKE TYPE LBS/314
FOR FLANGE ATTACHMENT TO MLHTS HYDRAULIC MOTORS

C Square Mount

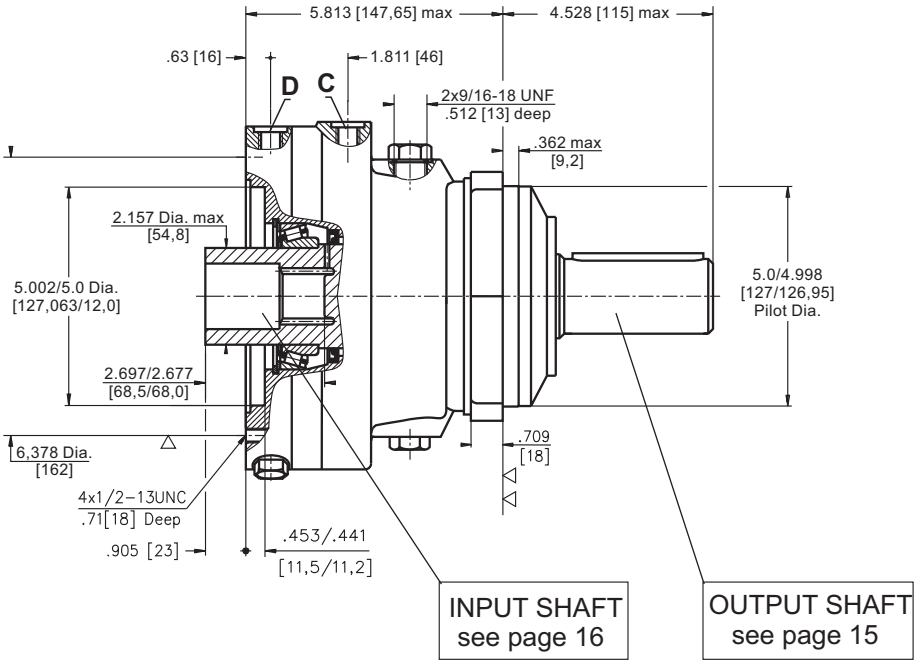

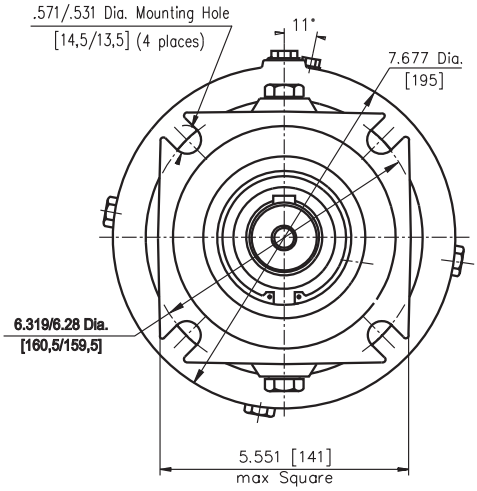

C: Brake release Port - 7/16-20UNF, deep .47 [12]

D: Drainage tap - 9/16-18UNF, deep .51 [13]

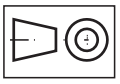

in [mm]

▽ - Place for attachment
(tightening torque for screws 4x1/2" - 13 UNC, 1¼ in [31,8 mm] long, ANSI B 18.3-76: 710^{+44} lb-in [$8^{+0,5}$ daNm])

▽▽ - Place for attachment

SPECIFICATION DATA

Description LBS/314(315) -… LBV/314(315)-…		21	29	43	65	85	110	130
*Min. Static Torque	lb-in [daNm]	1593-2036 [18-23]	2478-2921 [28-33]	3717-4071 [42-46]	5399-6196 [61-70]	7346-8143 [83-92]	9559-10444 [108-118]	11152-12037 [126-136]
Opening Pressure PSI [bar]	min	58-72 [4-5]	87-101 [6-7]	130-145 [9-10]	188-217 [13-15]	261-290 [18-20]	333-362 [23-25]	391-420 [27-29]
	max	4350 [300]						
Min. oil quantity for brake releasing	in^3 [cm^3]	.488 - .549 [8-9]						
Oil quantity	in^3 [cm^3]	9.15 - 18.3 [150-300]						
Max. Pressure in drain space	PSI [bar]	72 [5]						
Weight for .../314 for .../315	lb [kg]	52.9 [24] 55.1 [25]						

*Static torque is obtained at working pressure - 0 PSI [0 bar].

HYDRAULIC DISC BRAKE TYPE LBS/315
FOR FLANGE ATTACHMENT TO MLHTS HYDRAULIC MOTORS

W Wheel Mount

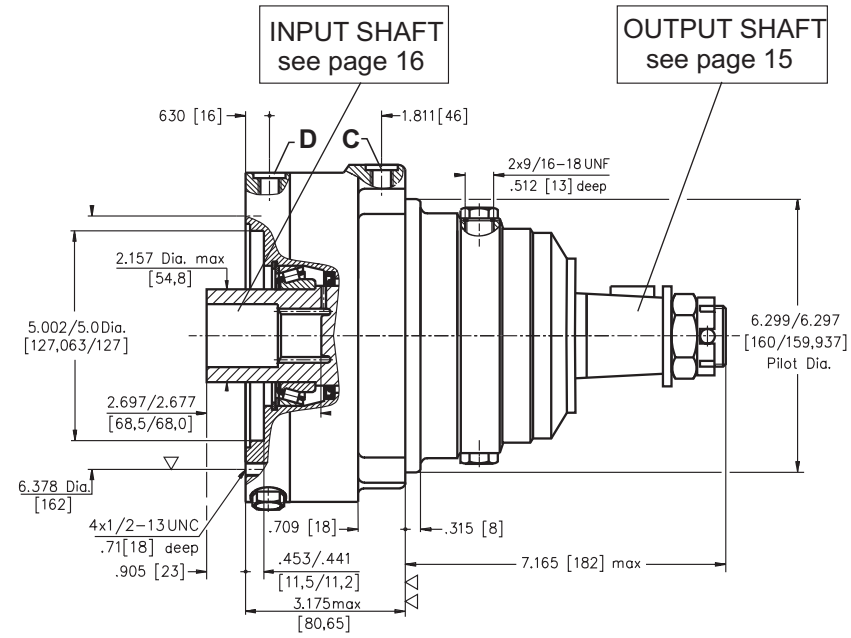

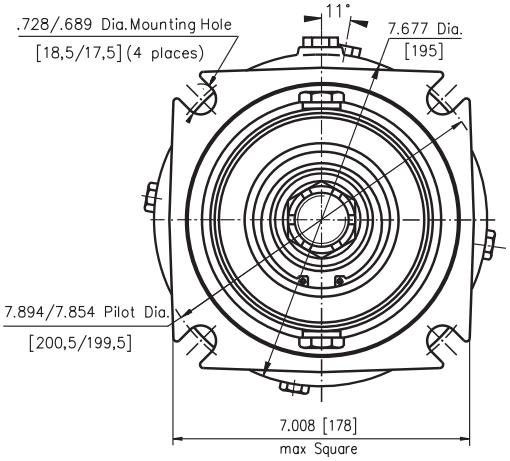

▽ - Place for attachment
(tightening torque 710^{+44} lb-in [8$^{+0,5}$ daNm] for screws 1/2" - 13 UNC, 1¼ in [31,8 mm] long, ANSI B 18.3-76)

▽▽ - Place for attachment

C: Brake release Port - 7/16-20UNF, deep .472 [12]

D: Drainage tap - 9/16-18UNF, deep .512 [13]

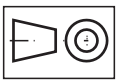

in [mm]

INPUT FACE

TYPE
LBS W/315-C
LBS C/314-C

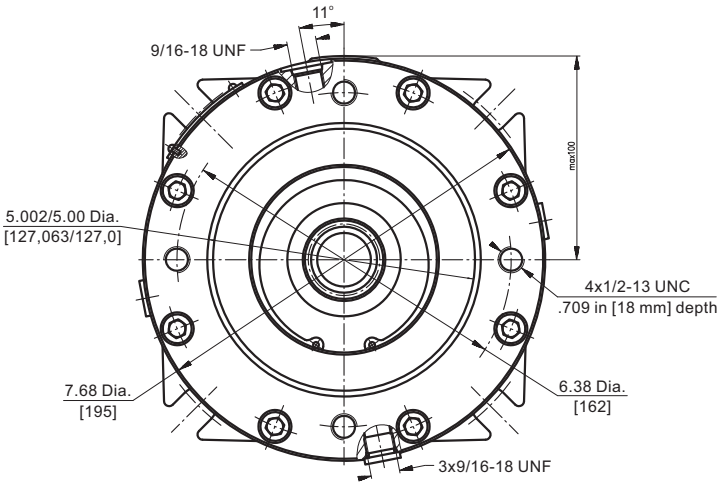

TYPE
LBV W/315-C
LBV C/314-C

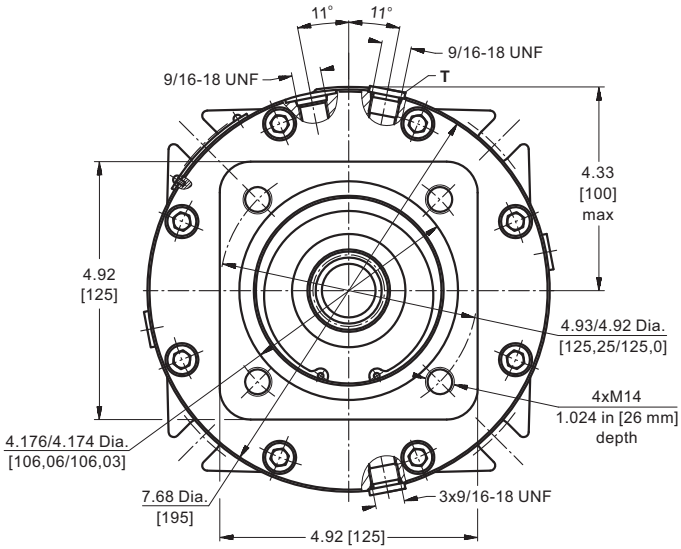

HYDRAULIC DISC BRAKE TYPE LBV/314
FOR FLANGE ATTACHMENT TO MLHTV HYDRAULIC MOTORS

C Square Mount

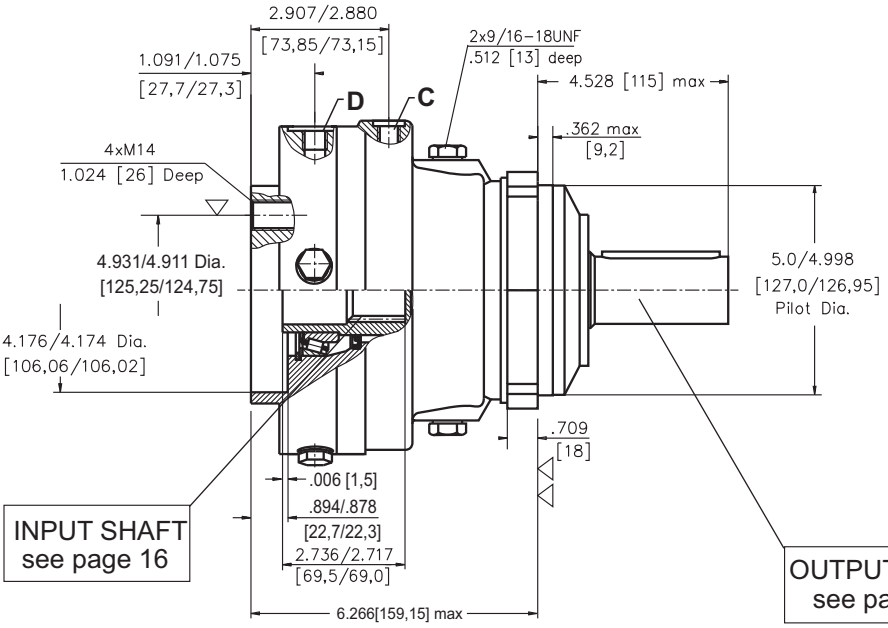

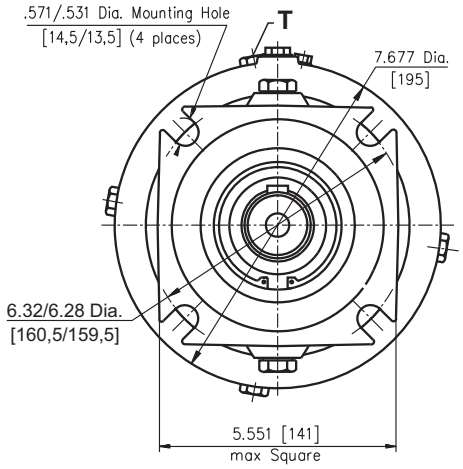

▽ - Place for attachment
(tightening torque for screws 4xM14 DIN 912: 1150^{+44} lb-in [$13^{+0,5}$ daNm])

▽▽ - Place for attachment

C : Brake release Port- 7/16 - 20UNF, .47 [12] depth
D : Drain plug for the Brake - 9/16-18UNF, .51 [13] depth
T : Drain plug for the Motor - 9/16-18UNF, .51 [13] depth

HYDRAULIC DISC BRAKE TYPE LBV/315
FOR FLANGE ATTACHMENT TO MLHTV HYDRAULIC MOTORS

W Wheel Mount

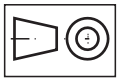

in [mm]

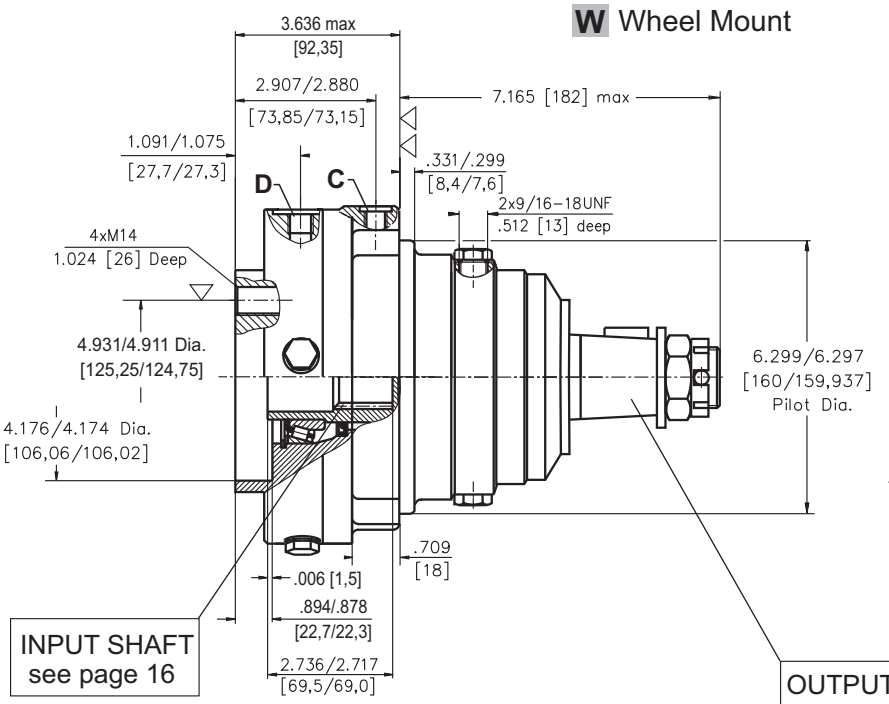

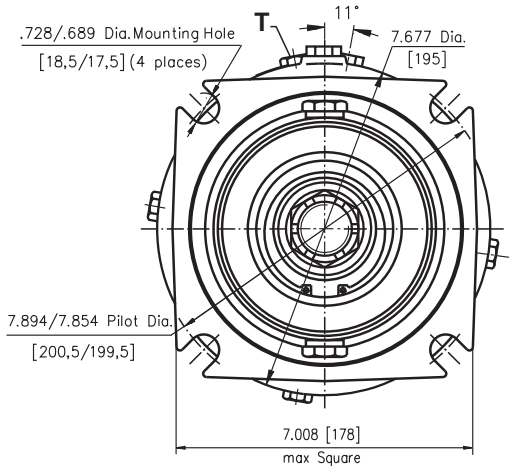

▽ - Place for attachment
(tightening torque for screws 4xM14 DIN 912: 1150^{+44} in-lb [$13^{+0,5}$ daNm])

▽▽ - Place for attachment

C : Brake release Port- 7/16 - 20UNF, .47 [12] depth
D : Drain plug for the Brake - 9/16-18UNF, .51 [13] depth
T : Drain plug for the Motor - 9/16-18UNF, .51 [13] depth

OUTPUT SHAFT EXTENSIONS for LB.../314, 315

C

1½"[38,1] straight, Parallel key⅜ "x⅜ "x 2¼" BS46
Max. Torque 11750 lb-in [133 daNm]

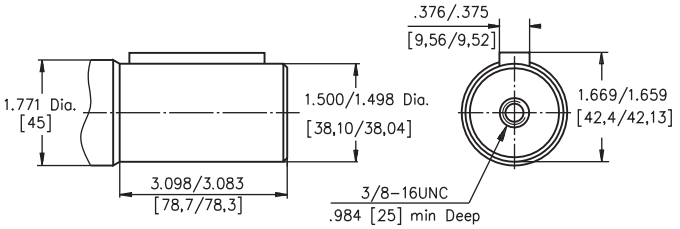

G

17T Splined, 1½" [38,1] ANS B92.1-1976
Max. Torque 11750 lb-in [133 daNm]

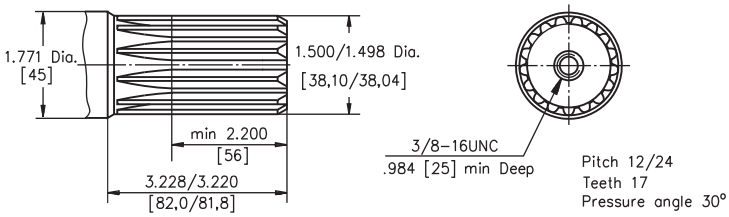

M

ø40 straight, Parallel key A12x8x70 DIN 6885
Max. Torque 11750 lb-in [133 daNm]

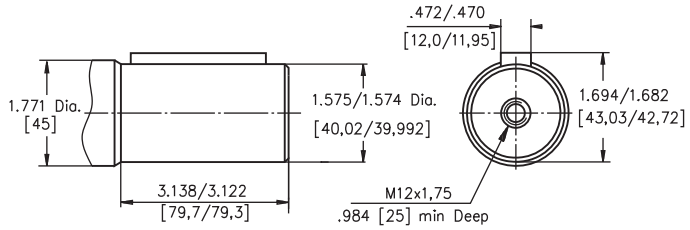

T

SAE J501 Tapered 1:8
Parallel key7/16"x7/16"x 1¼ " BS46
Max. Torque 18650 lb-in [210 daNm]

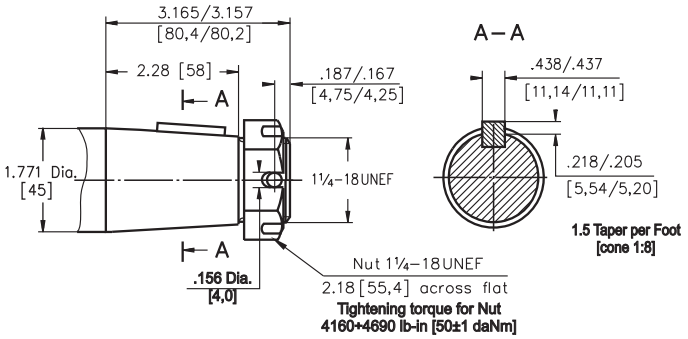

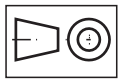

in [mm]

LOAD CURVE

The output shaft runs in tapered bearings that permit high axial and radial forces. The permissible radial load on the shaft is shown for an axial load of 0 N as function of the distance from the mounting flange to the point of load application. The curves apply to a B10 bearing life of 2000 hours at 100 RPM.

Version LB... /314

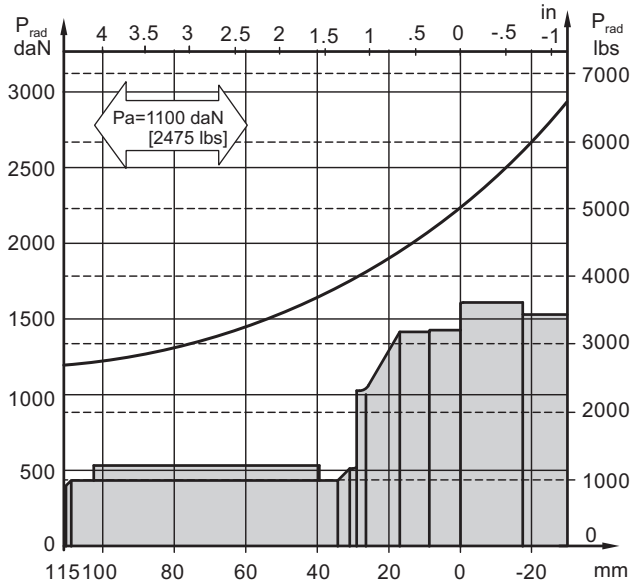

Version LB... /315

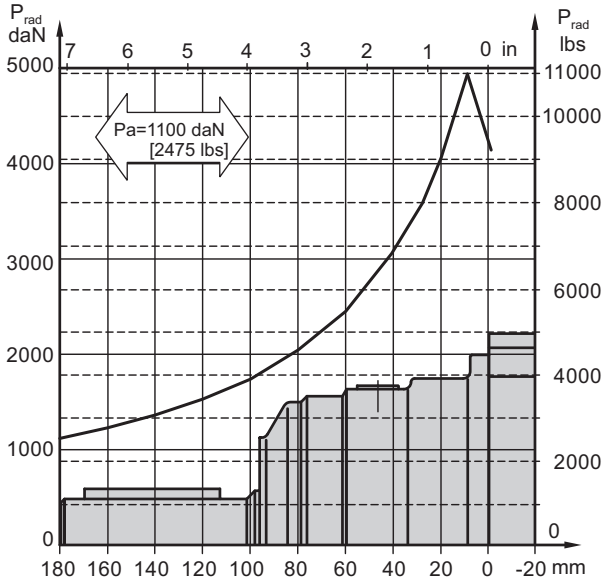

INTERNAL SPLINE DATA FOR THE ATTACHED COMPONENT

Standard ANS B92.1-1970, class 5
[m=2.1166]

Fillet Root Side Fit		LBS(V)/289 LBS(V)/290		LBS(V)/314 LBS(V)/315	
		inch	mm	inch	mm
Number of Teeth	z	12	12	16	16
Diametral Pitch	DP	12/24	12/24	12/24	12/24
Pressure Angle		30º	30º	30°	30°
Pitch Dia.	D	1	25,4	1.3333	33,8656
Major Dia.	Dri	1.1 ÷ 1.098	$28{,}0_{-0{,}1}$	1.5275÷1.5118	$38{,}4^{+0{,}4}$
Minor Dia.	Di	.9068 ÷ .9055	$23{,}0^{+0{,}033}$	1.2673÷1.2657	$32{,}15^{+0{,}06}$
Space Width [Circular]	Lo	.1704 ÷ .1688	4,308±0,020	.1763÷.1792	4,516±0,037
Fillet Radius	R	.008	0,2	.02	0,5
Max. Measurement between Pins	L	.699 ÷ .694	$17{,}62^{+0{,}15}$	1.063÷1.059	$26{,}9^{+0{,}10}$
Pin Dia.	d	.19039÷.19031	4,835±0,001	.19026÷.19034	4,835±0,001
Corrected	x.m	+.031	+0,8	+.039	+1,0

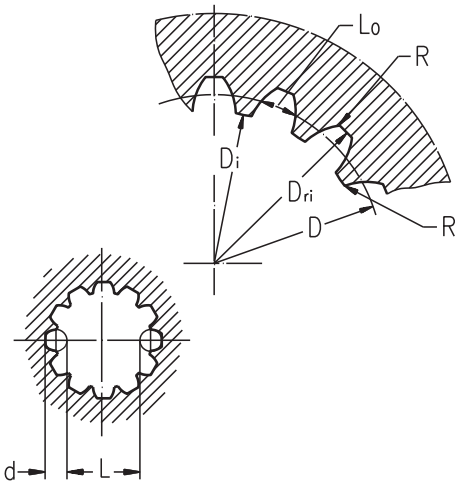

ORDER CODE for LBS(LBV)/314 and 315

	1	2		3		4	5	6	7
L B			/		-				

Pos.1 - Type

- **S** - Disc Brake for short motor **S -** MLHTS
- **V** - Disc Brake for very short motor **V -** MLHTV

Pos.2 - Output Face

- **C** - Square Mount [for LBS(LBV)/314 only]
- **W** - Wheel Mount [for LBS(LBV)/315 only]

Pos.3 - Design Code

- **314** - for MLHTS and MLHTV Motors
- **315** - for MLHTS and MLHTV Motors [Wheel Mounting Motors]

Pos.4 - Static Torque Code [see Specification Data]

21, 29, 43, 65, 85, 110, 130

Pos.5 - Output Shaft Extensions*

- **C** - 1½" [38,10] straight, Parallel key
- **G** - 1½" [38,10] 17T Splined
- **M** - 40 mm straight, Parallel key
- **T** - 1¾"[44,50] SAE J501 Tapered

Pos.6 - Option [Paint]**

- omit - no Paint
- **P** - Painted
- **PC** - Corrosion Protected Paint

Pos.7 - Design Series

omit - Factory specified

Notes: * *For Max. Torque values see data on page 15. The permissible output torque for shafts must not be exceeded!*
** *Color at customer's request.*

The Disc Brakes are mangano phosphatized as standard.

ATTENTION:
1. Hydraulic brake is delivered without oil (it is lubricated only).
2. Fill the brake through the drain port **D** with 50 ÷ 120 cm^3 [3.05÷7.32 in^3] mineral oil HLP (DIN 51524) or HM (ISO 6743/4). LB/288 must be filled after the motor is assembled on the brake.
3. In all brakes, friction discs and separators should be lubricated.

HYDRAULIC DISC BRAKES B...R- Wet

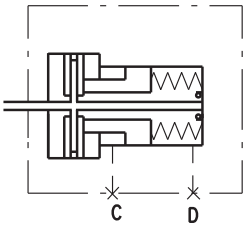

B...R brake is designed to be mounted to the wheels of low-speed agricultural and construction vehicles.

The advantage of these brakes is that despite the smallest possible dimensions they preserve long-term life of the bearings at high radial shaft load.

SPECIFICATION DATA

Type	B35R	B55R
Static Torque of Brake, lb-in [daNm]*	3100 [35]	4870 [55]
Initial Release Pressure, PSI [bar]	232 [16]	232 [16]
Full Release Pressure, PSI [bar]	275 [19]	275 [19]
Max. Operating Pressure, PSI [bar]	3480 [240]	3480 [240]
Max. Speed, RPM	90	90
Cont. Radial Shaft Load lbs [daN]**	1125 [500]	1125 [500]
Max. Radial Shaft Load lbs [daN]***	1575 [700]	2030 [900]

* At 0 PSI [0 bar] back pressure

** At radial shaft load of 1125 lbs [500 daN], applied at center-line of the key and speed of rotation 90 RPM, the bearing life is 1000 hours.

*** The permissible values of radial shaft load may occur for max. 10% of every minute

DIMENSIONS AND MOUNTING DATA

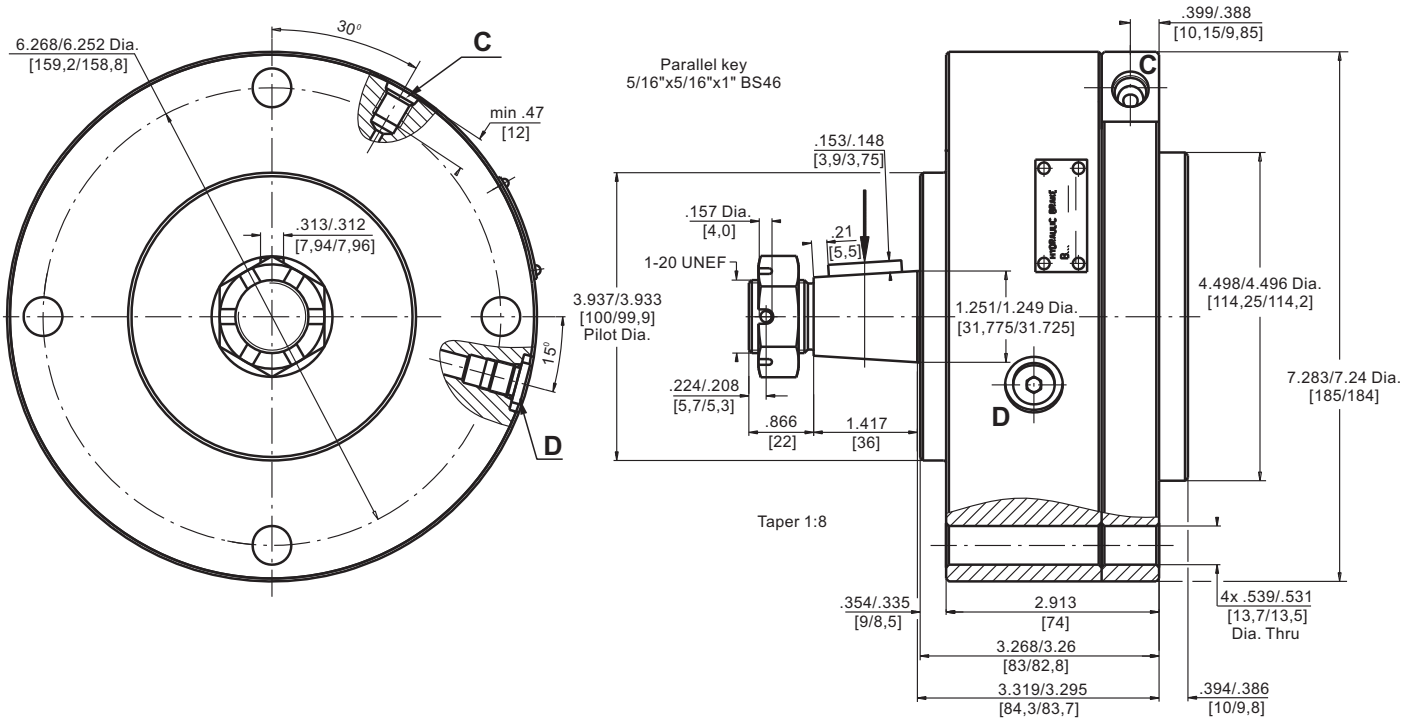

C : Brake Release Port -7/16-20 UNF
SAE J1926-1/ISO 11926-1

D : Drainage Tap - 7/16-20 UNF

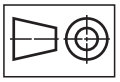

in [mm]

HYDRAULIC DISC BRAKES B...T- Wet

B..T brake is designed to be mounted to the wheels of low-speed agricultural and construction vehicles.

The advantage of these brakes is that despite the smallest possible dimensions they preserve long-term life of the bearings at high radial shaft load.

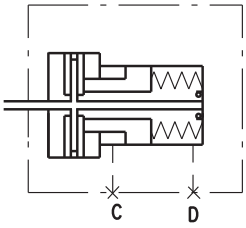

SPECIFICATION DATA

Type	B50T	B55T	B60T	B65T	B85T
Static Torque of Brake, lb-in [daNm]*	4425 [50]	4870 [55]	5310 [60]	5750 [65]	7525 [85]
Initial Release Pressure, PSI [bar]	232 [16]	232 [16]	232 [16]	246 [17]	260 [18]
Full Release Pressure, PSI [bar]	275 [19]	275 [19]	275 [19]	290 [20]	320 [22]
Max. Operating Pressure, PSI [bar]	3480 [240]	3480 [240]	3480 [240]	3480 [240]	3480 [240]
Max. Speed, RPM	60	60	60	60	60
Cont. Radial Shaft Load lbs [daN]**	2250 [1000]	2250 [1000]	2250 [1000]	2250 [1000]	2250 [1000]
Max. Radial Shaft Load lbs [daN]***	4830 [2150]	4830 [2150]	4830 [2150]	4830 [2150]	4830 [2150]

* At 0 PSI [0 bar] back pressure
** At radial shaft load of 2250 lbs [1000 daN], applied at center-line of the key and speed of rotation 60 RPM, the bearing life is 1000 hours.
*** The permissible values of radial shaft load may occur for max. 10% of every minute

DIMENSIONS AND MOUNTING DATA

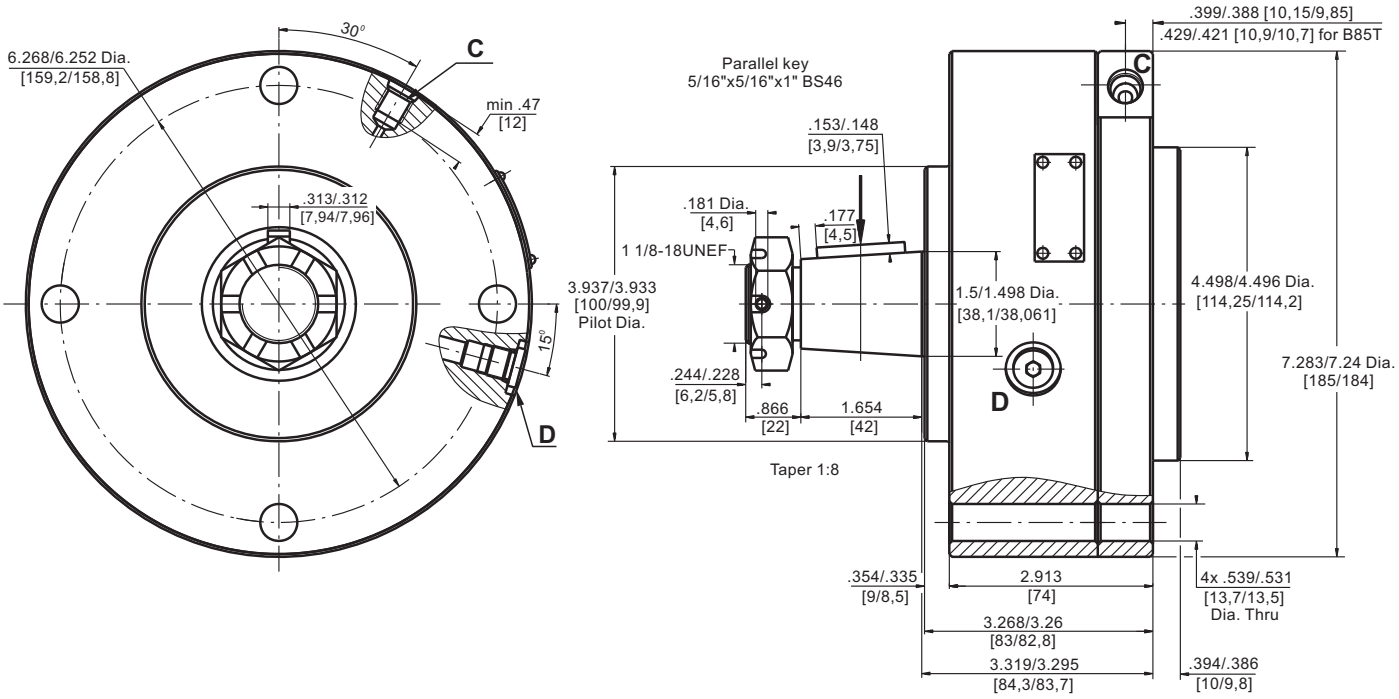

C : Brake Release Port -7/16-20 UNF
SAE J1926-1/ISO 11926-1
D : Drainage Tap - 7/16-20 UNF

in [mm]

HYDRAULIC MOTOR-BRAKES B/HR

APPLICATION

- » Conveyors
- » Feeding mechanism of robots and manipulators
- » Metal working machines
- » Textile machines
- » Agricultural machines
- » Food industries
- » Wood working and sawmill machinery etc.

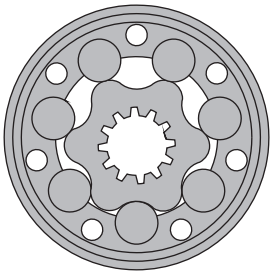

CONTENTS

Specification data 20
Dimensions and mounting. 21
Shaft versions 21
Permissible shaft loads..... 22
Order code 22

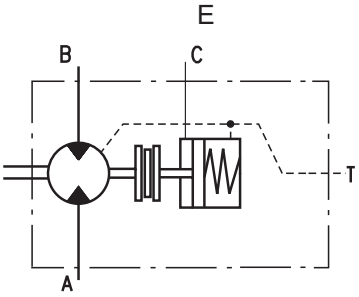

OPTIONS

- » Model - Spool valve, roll-gerotor
- » Fully integrated friction disk brake;
- » Side ports
- » Shafts - straight, splined and tapered
- » Manifold ports.

GENERAL

Displacement, in^3/rev [cm^3/rev]	24.4 [397]
Max. Speed, [RPM]	600
Max. Torque, lb-in [daNm]	cont. 4250 [48] int. 4870 [55]
Max. Output, HP [kW]	20.1 [15]
Max. Pressure Drop, PSI [bar]	cont. 2030 [140] int. 2540 [175]
Max. Oil Flow, GPM [lpm]	20 [75,7]
Min. Speed, [RPM]	10
Pressure fluid	Mineral based - HLP(DIN 51524) or HM(ISO 6743/4)
Temperature range, ^{o}F [^{o}C]	-40÷284 [-40÷140]
Optimal Viscosity range, SUS [mm^2/s]	98÷347 [20÷75]
Filtration	ISO code 20/16 (Min. recommended fluid filtration of 25 microns)

Oil flow in drain line

Pressure drop PSI [bar]	Viscosity SUS [mm^2/s]	Oil flow in drain line GPM [lpm]
1450 [100]	98 [20]	.660 [2,5]
	164 [35]	.476 [1,8]
2030 [140]	98 [20]	.925 [3,5]
	164 [35]	.740 [2,8]

Pressure Losses

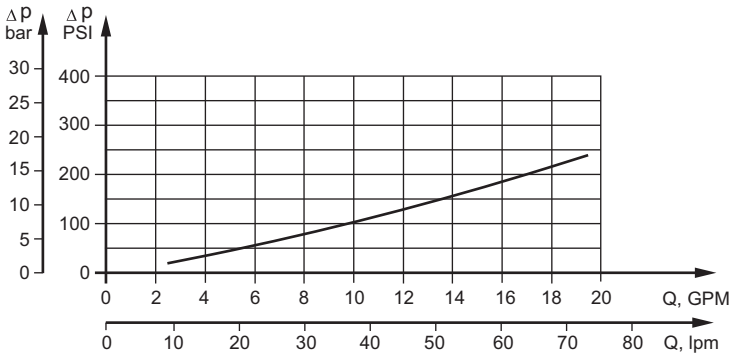

SPECIFICATION DATA

Type		B/HR 80	B/HR 100	B/HR 125	B/HR 160	B/HR 200	B/HR 250	B/HR 315	B/HR 400
Displacement, in³/rev [cm³/rev]		4.90 [80,3]	6.09 [99,8]	7.67 [125,7]	9.74 [159,6]	12.19 [199,8]	15.26 [250,1]	19.26 [315,7]	24.23 [397]
Max. Speed, [RPM]	Cont.	500	500	475	375	300	240	190	150
	Int.*	600	600	600	470	375	300	240	191
Max. Torque lb-in [daNm]	Cont.	1390 [15,7]	1750 [19,8]	2210 [25,0]	2830 [32,0]	3045 [34,4]	3540 [40,0]	3850 [43,5]	4250 [48,0]
	Int.*	1725 [19,5]	2125 [24,0]	2655 [30,0]	3450 [39,0]	3450 [39,0]	4160 [47,0]	4515 [51,0]	4870 [55,0]
Max. Output HP [kW]	Cont.	14 [10,5]	14 [10,5]	14 [10,5]	13.7 [10,2]	12.6 [9,4]	10.7 [8]	8.7 [6,5]	8.2 [6,1]
	Int.*	20.1 [15]	20.1 [15]	20.1 [15]	18.8 [14]	18.7 [14]	15.4 [11,5]	12.1 [9]	11 [8,2]
Max. Pressure Drop PSI [bar]	Cont.	2030 [140]	2030 [140]	2030 [140]	2030 [140]	1810 [125]	1595 [110]	1450 [100]	1305 [90]
	Int.*	2540 [175]	2540 [175]	2540 [175]	2540 [175]	2250 [155]	2030 [140]	1810 [125]	1520 [105]
Max. Oil Flow GPM [lpm]	Cont.	10.6 [40]	13 [50]	16 [60,6]	16 [60,6]	16 [60,6]	16 [60,6]	16 [60,6]	16 [60,6]
	Int.*	13 [50]	16 [60,6]	20 [75,7]	20 [75,7]	20 [75,7]	20 [75,7]	20 [75,7]	20 [75,7]
Max. Inlet Pressure PSI [bar]	Cont.	2030 [140]	2030 [140]	2030 [140]	2030 [140]	2030 [140]	2030 [140]	2030 [140]	2030 [140]
	Int.*	2540 [175]	2540 [175]	2540 [175]	2540 [175]	2540 [175]	2540 [175]	2540 [175]	2540 [175]
Max. Return Pressure , PSI [bar]	Cont.	2030 [140]	2030 [140]	2030 [140]	2030 [140]	2030 [140]	2030 [140]	2030 [140]	2030 [140]
	Int.*	2540 [175]	2540 [175]	2540 [175]	2540 [175]	2540 [175]	2540 [175]	2540 [175]	2540 [175]
Max. Starting Pressure with Unloaded Shaft, PSI [bar]		145 [10]	145 [10]	130 [9]	102 [7]	73 [5]	58 [4]	44 [3]	44 [3]
Min. Starting Torque lb-in [daNm]	At max.press. drop Cont.	1060 [12]	1420 [16]	1770 [20]	2270 [25,6]	2620 [29,5]	2510 [28,3]	2840 [32]	3170 [35,8]
	At max.press. drop Int.*	1310 [14,8]	1780 [20,1]	1930 [21,8]	2860 [32,3]	3150 [35,6]	3400 [38,4]	4580 [51,7]	4040 [45,6]
Min. Speed***, [RPM]		10	10	10	10	10	10	10	10
Static Torque of Brake, lb-in [daNm]		4868 [55]							
Min. Brake Release Pressure****, PSI [bar]		190 [13]							
Max.Opening Pressure, PSI [bar]		2900 [200]							

* Intermittent operation: the permissible values may occur for max. 10% of every minute.

** Peak load: the permissible values may occur for max. 1% of every minute.

*** For speeds lower than given, consult factory or your regional manager.

**** Motor-brakes must always have a drain line. The brake release pressure is the difference between the pressure in the brake release line and the pressure in the drain line.

1. Intermittent speed and intermittent pressure drop must not occur simultaneously.
2. Recommended filtration is per ISO cleanliness code 20/16. A nominal filtration of 25 micron or better.
3. Recommend using a premium quality, anti-wear type mineral based hydraulic oil HLP(DIN51524) or HM (ISO 6743/4). If using synthetic fluids consult the factory for alternative seal materials.
4. Recommended minimum oil viscosity 70 SUS [13 mm²/s] at 122ºF [50ºC].
5. Recommended maximum system operating temperature is 180ºF [82ºC].
6. To assure optimum motor life fill with fluid prior to loading and run at moderate load and speed for 10-15 minutes.

DIMENSIONS AND MOUNTING DATA

Version 1

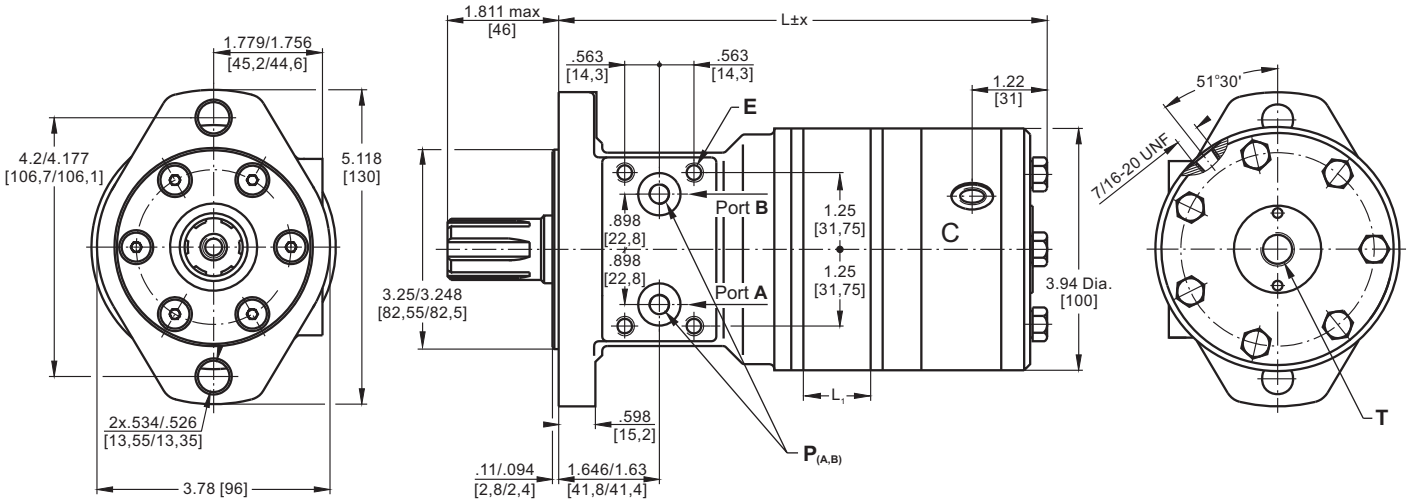

Version 4

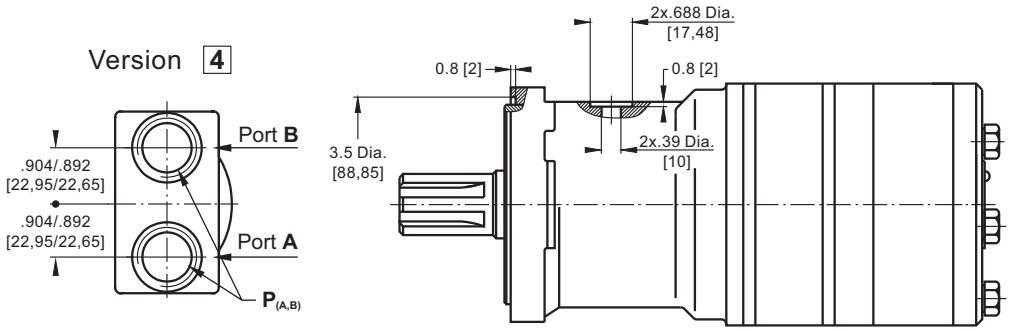

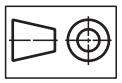

in [mm]

Type	L±x, in [mm]	L_1, in [mm]
B/HR 80	7.73 [196,3]	.55 [14,0]
B/HR 100	7.86 [199,7]	.69 [17,4]
B/HR 125	7.86 [199,7]	.69 [17,4]
B/HR 160	8.04 [204,1]	.86 [21,8]
B/HR 200	8.27 [210,1]	1.09 [27,8]
B/HR 250	8.55 [217,1]	1.37 [34,8]
B/HR 315	8.89 [225,8]	1.71 [43,5]
B/HR 400	9.33 [237,1]	2.16 [54,8]

x=.059 in [1,5 mm]

Standard Rotation
Viewed from Shaft End
Port **A** Pressurized - **CW**
Port **B** Pressurized - **CCW**

Reverse Rotation
Viewed from Shaft End
Port **A** Pressurized - **CCW**
Port **B** Pressurized - **CW**

	Versions	
	1	4
C	4x 5/16-18UNC	-
P(A,B)	2x.39 Dia [2x10]	2x 7/8-14UNF
T	7/16 -20UNF	7/16 -20UNF

SHAFT EXTENSIONS

C

1" [25,4] straight, Woodruff key ¼"x1" SAE J502
Max. Torque 3900 in-lb [44 daNm]

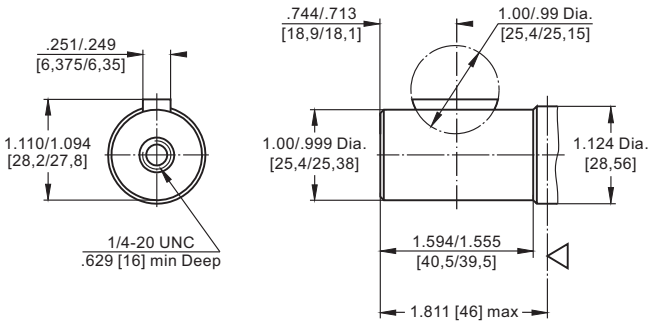

G

1" [25,4], SAE 6B Splined
Max. Torque 3900 in-lb [44 daNm]

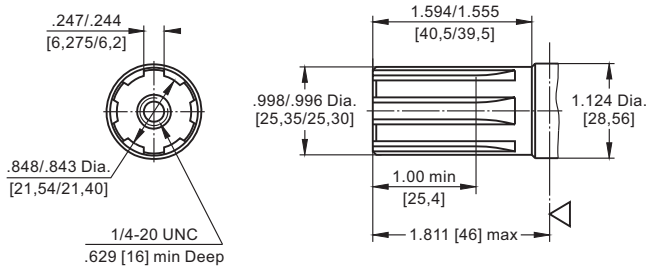

PERMISSIBLE SHAFT LOADS

The permissible radial shaft load P_{rad} depends on the speed RPM and distance *L* from the point of load to the mounting flange.

$$\text{Radial Shat Load } P_{rad} = \frac{650}{RPM} \times \frac{24800}{97+L}, \text{ daN*}$$

* *L* - in mm.

$$\text{Radial Shaft Load: } P_{rad} = \frac{1460}{RPM} \times \frac{976}{3.82+L}, \text{ lbs*}$$

* *L* - in inch

1. RPM < 200: max Prad=1460 lbs [650 daN]
2. RPM ≥200: *L* < 2.2 in [55 mm]

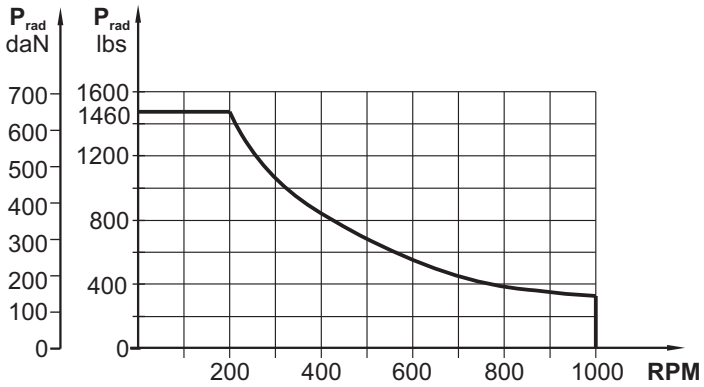

$P_{a\,max}$=330 lbs [150 daN]

$P_{a\,max}$=440 lbs [200 daN]

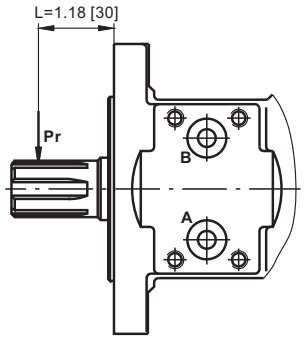

Warning: Drain line should always be used.

ORDER CODE

	1	2	3	4	5
B / H R					

Pos.1 - Displacement code

80	- 4.90 in³/rev [80,3 cm³/rev]
100	- 6.09 in³/rev [99,8 cm³/rev]
125	- 7.67 in³/rev [125,7 cm³/rev]
160	- 9.74 in³/rev [159,6 cm³/rev]
200	- 12.19 in³/rev [199,8 cm³/rev]
250	- 15.26 in³/rev [250,1 cm³/rev]
315	- 19.26 in³/rev [315,7 cm³/rev]
400	- 24.40 in³/rev [397,0 cm³/rev]

Pos.2 - Shaft Extensions**

C	- 1" [25,4] straight, Woodruff key
G	- 1" [25,4] SAE 6B Splined

Pos.3 - Port Size/Type [standard manifold to each]

1	- side ports, Manifold [5/16-18 UNC Mounting Threads], 7/16-20 UNF
4	- side ports, 2x7/8-14 UNF, O-ring, 7/16-20 UNF

Pos.4 - Special Features [See page 55]

Pos.5 - Design Series

omit - Factory specified

NOTES: * For the Performance Data please look at "M+S Hydraulic" Catalogue for MLHR motors.
** The permissible output torque for shafts must not be exceeded!

The hydraulic motors are mangano-phosphatized as standard.

HYDRAULIC MOTOR-BRAKES RWB

APPLICATION

» Conveyors
» Feeding mechanism of robots and manipulators
» Metal working machines
» Textile machines
» Agricultural machines
» Food industries
» Grass cutting machinery etc.

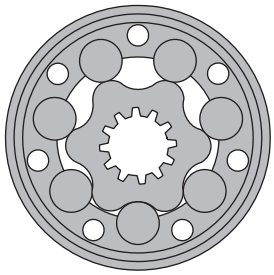

CONTENTS

Specification data 24
Dimensions and mounting 25
Permissible shaft Seal Pressure ... 26
Permissible shaft loads 26
Brake Holding Torque..... 27
Order code 27

OPTIONS

» Model - Spool valve, roll-gerotor
» Drum brake
» Shaft seal for high and low pressure
» SAE, Metric and BSPP ports
» Other special features

GENERAL

Max. Displacement, in^3/rev [cm^3/rev]	24.4 [397]
Max. Speed, [RPM]	1029
Max. Torque, lb-in [daNm]	cont.: 5400 [61] int.: 6100 [69]
Max. Output, HP [kW]	20.1 [15]
Max. Pressure Drop, PSI [bar]	cont.: 2540 [175] int.: 2900 [200]
Max. Oil Flow, GPM [lpm]	23.8 [90]
Min. Speed, [RPM]	10
Pressure fluid	Mineral based- HLP(DIN 51524) or HM(ISO 6743/4)
Temperature range, ^{o}F [^{o}C]	-40÷284 [-40÷140]
Optimal Viscosity range, SUS [mm^2/s]	98÷347 [20÷75]
Filtration	ISO code 20/16 (Min. recommended fluid filtration of 25 microns)

Oil flow in drain line

Pressure drop PSI [bar]	Viscosity SUS [mm^2/s]	Oil flow in drain line GPM [lpm]
1450 [100]	98 [20]	.660 [2,5]
	164 [35]	.476 [1,8]
2030 [140]	98 [20]	.925 [3,5]
	164 [35]	.740 [2,8]

Pressure Losses

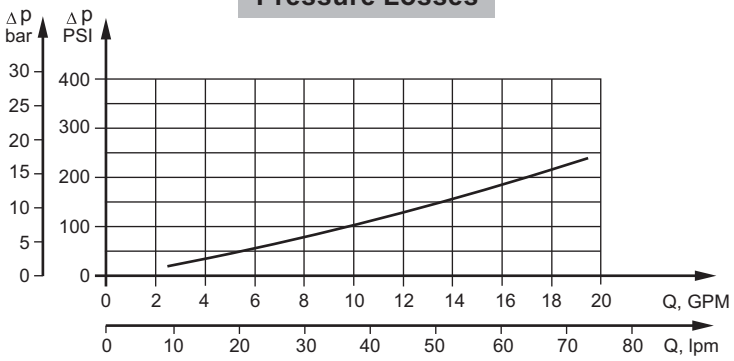

SPECIFICATION DATA

Type		RWB 50	RWB 80	RWB 100	RWB 125	RWB 160	RWB 200	RWB 250	RWB 315	RWB 400
Displacement, in³/rev		3.14	4.90	6.09	7.67	9.74	12.19	15.26	19.26	24.4
[cm³/rev]		[51,5]	[80,3]	[99,8]	[125,7]	[159,6]	[199,8]	[250,1]	[315,7]	[397]
Max. Speed,	Cont.	775	750	600	475	375	300	300	240	190
[RPM]	Int.*	1029	940	750	600	470	375	360	285	226
Max. Torque	Cont.	900 [10]	1770 [20]	2125 [24]	2655 [30]	3450 [39]	4000 [45]	4780 [54]	4870 [55]	5400 [61]
lb-in [daNm]	Int.*	1150 [13]	1947 [22]	2480 [28]	3010 [34]	3805 [43]	4425 [50]	5400 [61]	5580 [63]	6100 [69]
	Peak**	1505 [17]	2390 [27]	2832 [32]	3275 [37]	4070 [46]	4960 [56]	6280 [71]	7350 [83]	7700 [87]
Max. Output	Cont.	9.5 [7]	17 [12,5]	17.4 [13]	16.8 [12,5]	15.4 [11,5]	14.8 [11]	13.4 [10]	12 [9]	10.5 [7,8]
HP [kW]	Int.*	11.9 [8,5]	20.1 [15]	20.1 [15]	19.5 [14,5]	18.8 [14]	17.4 [13]	16.1 [12]	14.8 [11]	14.2 [10,6]
Max. Pressure Drop	Cont.	2030 [140]	2540 [175]	2540 [175]	2540 [175]	2540 [175]	2540 [175]	2540 [175]	1960 [135]	1600 [110]
PSI [bar]	Int.*	2540 [175]	2900 [200]	2900 [200]	2900 [200]	2900 [200]	2900 [200]	2900 [200]	2320 [160]	2030 [140]
	Peak**	3260 [225]	3260 [225]	3260 [225]	3260 [225]	3260 [225]	3260 [225]	3260 [225]	3045 [210]	2540 [175]
Max. Oil Flow	Cont.	11 [40]	15.9 [60]	15.9 [60]	15.9 [60]	15.9 [60]	15.9 [60]	19.8 [75]	19.8 [75]	19.8 [75]
GPM [lpm]	Int.*	13 [50]	19.8 [75]	19.8 [75]	19.8 [75]	19.8 [75]	19.8 [75]	23.8 [90]	23.8 [90]	23.8 [90]
Max. Inlet Pressure	Cont.	2540 [175]	2540 [175]	2540 [175]	2540 [175]	2540 [175]	2540 [175]	2540 [175]	2540 [175]	2540 [175]
PSI [bar]	Int.*	2900 [200]	2900 [200]	2900 [200]	2900 [200]	2900 [200]	2900 [200]	2900 [200]	2900 [200]	2900 [200]
	Peak**	3260 [225]	3260 [225]	3260 [225]	3260 [225]	3260 [225]	3260 [225]	3260 [225]	3260 [225]	3260 [225]
Max. Return Pres-	Cont.	2540 [175]	2540 [175]	2540 [175]	2540 [175]	2540 [175]	2540 [175]	2540 [175]	2540 [175]	2540 [175]
sure with Drain Line	Int.*	2900 [200]	2900 [200]	2900 [200]	2900 [200]	2900 [200]	2900 [200]	2900 [200]	2900 [200]	2900 [200]
PSI [bar]	Peak**	3260 [225]	3260 [225]	3260 [225]	3260 [225]	3260 [225]	3260 [225]	3260 [225]	3260 [225]	3260 [225]
Max. Starting Pressure with Unloaded Shaft, PSI [bar]		145 [10]	145 [10]	145 [10]	130 [9]	102 [7]	73 [5]	73 [5]	73 [5]	73 [5]
Min. Starting Torque lb-in [daNm]	At max.press. drop Cont.	710 [8]	1330 [15]	1770 [20]	2215 [25]	2832 [32]	3630 [41]	4425 [50]	4425 [50]	4425 [50]
	At max.press. drop Int.*	885 [10]	1505 [17]	2035 [23]	2480 [28]	3275 [37]	4070 [46]	4870 [55]	5840 [66]	5400 [61]
Min. Speed*, [RPM]**		10	10	10	9	7	5	6	5	5

* Intermittent operation: the permissible values may occur for max. 10% of every minute.
** Peak load: the permissible values may occur for max. 1% of every minute.
*** For speeds lower than given, consult factory or your regional manager.

1. Intermittent speed and intermittent pressure drop must not occur simultaneously.
2. Recommended filtration is per ISO cleanliness code 20/16. A nominal filtration of 25 micron or better.
3. Recommend using a premium quality, anti-wear type mineral based hydraulic oil HLP(DIN51524) or HM (ISO 6743/4). If using synthetic fluids consult the factory for alternative seal materials.
4. Recommended minimum oil viscosity 70 SUS [13 mm²/s] at 122ºF [50ºC].
5. Recommended maximum system operating temperature is 180ºF [82ºC].
6. To assure optimum motor life fill with fluid prior to loading and run at moderate load and speed for 10-15 minutes.

DIMENSIONS AND MOUNTING DATA

B 5 Bolt Brake Drum

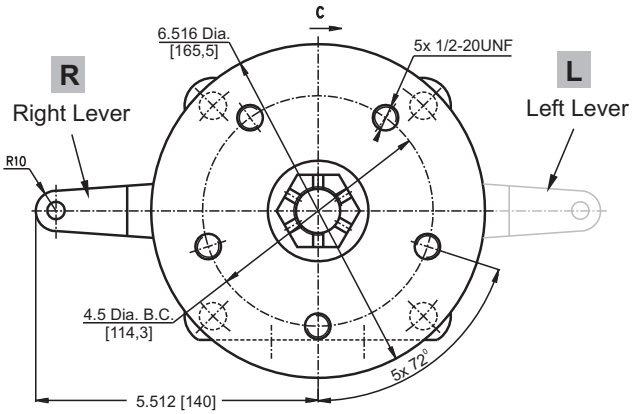

A 4 Bolt Brake Drum

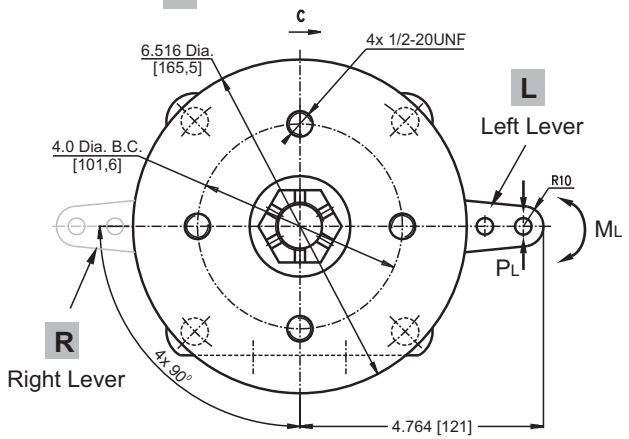

RW.../B2V-2R

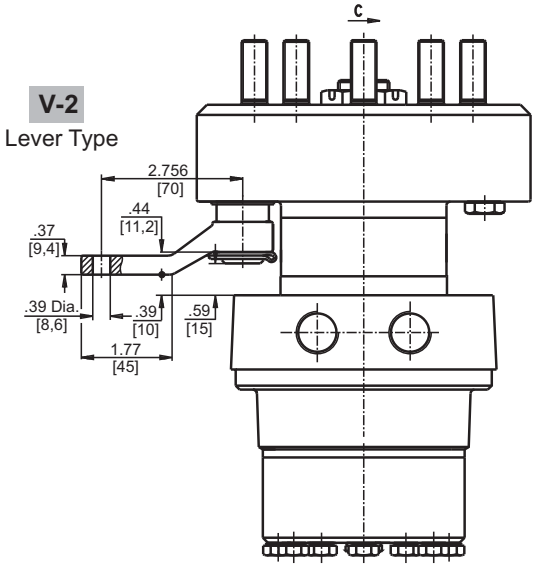

RW.../A2V-1L

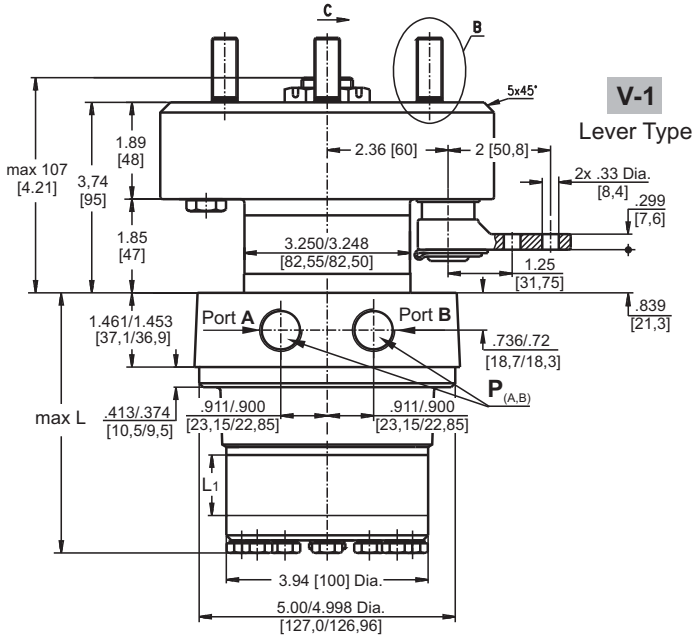

Wheel Bolts Type

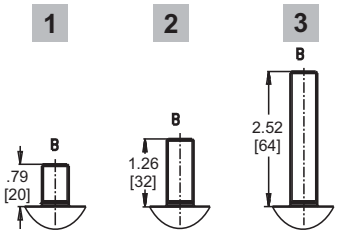

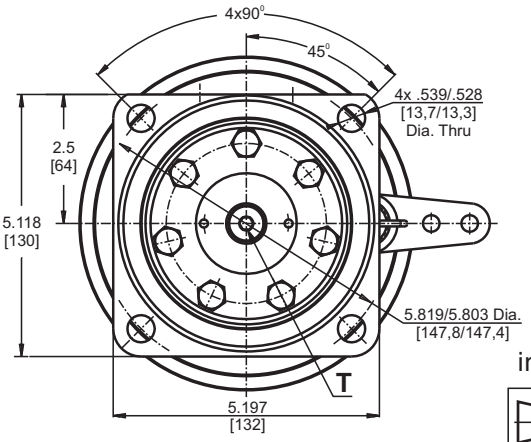

in [mm]

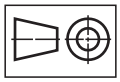

Type	Lmax, in [mm]	L1, in [mm]
RWB 50	4.25 [108,0]	.35 [9,0]
RWB 80	4.45 [113,0]	.55 [14,0]
RWB 100	4.59 [116,5]	.69 [17,4]
RWB 125	4.74 [120,5]	.86 [21,8]
RWB 160	4.98 [126,5]	1.09 [27,8]
RWB 200	5.26 [133,5]	1.37 [34,8]
RWB 250	5.61 [142,5]	1.71 [43,5]
RWB 315	6.04 [153,5]	2.16 [54,8]
RWB 400	6.63 [168,5]	2.73 [69,4]

Standard Rotation
Viewed from Shaft End
Port A Pressurized - **CW**
Port B Pressurized - **CCW**

Reverse Rotation
Viewed from Shaft End
Port A Pressurized - **CCW**
Port B Pressurized - **CW**

	Versions		
	2	3	4
P(A,B)	2xG½	2xM22x1,5	2x⅞-14UNF O-ring
T	G¼	M14x1,5	7/16-20UNF O-ring

PERMISSIBLE SHAFT LOADS RWB

The curve applies to a B10 bearing life of 2000 hours when mineral-based hydraulic oil with sufficient content of anti-wear additives is used.

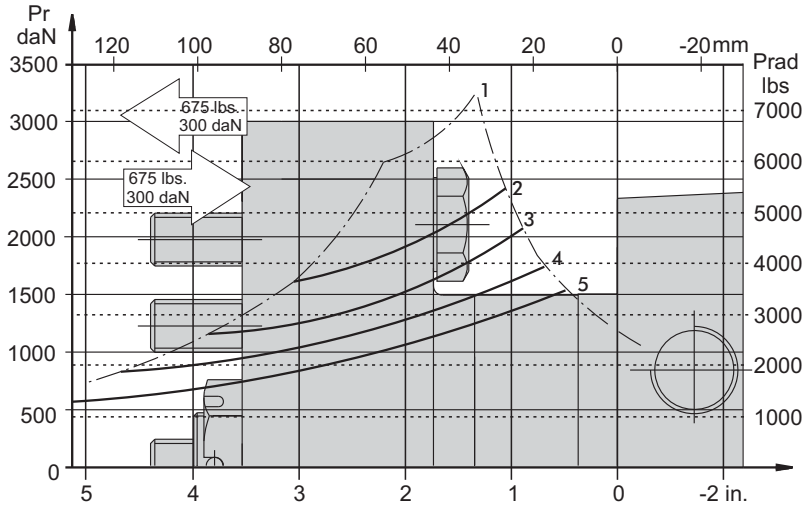

1. Permissible radial shaft load
2. Drawing by n= 50 RPM
3. Drawing by n=100 RPM
4. Drawing by n=200 RPM
5. Drawing by n=400 RPM

MAX. PERMISSIBLE SHAFT SEAL PRESSURE

RWB...; RWB...UK motors with drain connection:

The shaft seal pressure equals the pressure in the drain line.

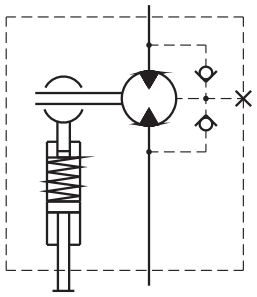

RWB...1 motors without drain connection:

The shaft seal pressure never exceeds the pressure in the return line.

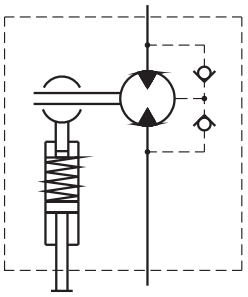

RWB...U motors with high pressure seal and drain connection:

The shaft seal pressure equals the pressure in the drain line.

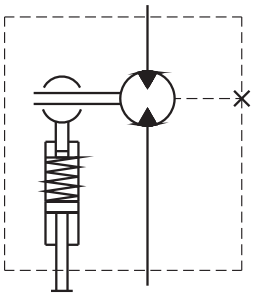

Max. return pressure without drain line or max. pressure in the drain line

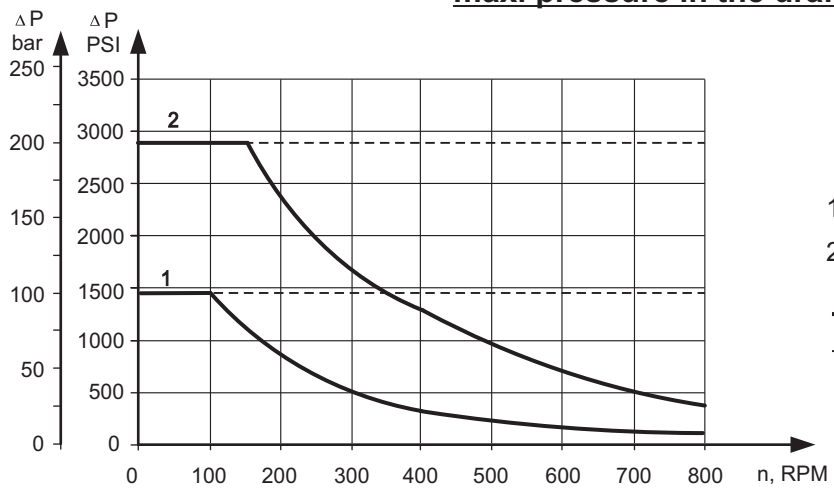

1: Drawing for Standard Shaft Seal

2: Drawing for High Pressure Seal ("U" Seal)

——— - continuous operations

- - - - - - intermittent operations

BRAKE HOLDING TORQUE

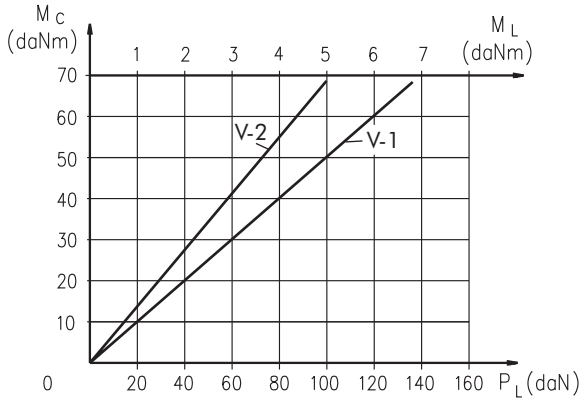

P_L - Brake Lever Load
M_C - Brake Torque
M_L - Brake Lever Torque
M_C max=68 daNm

SHAFT

1¼" [31,75],SAE J501 Tapered
Parallel key 5/16"x 5/16"x1"
Max. Torque 6815 lb-in [77 daNm]

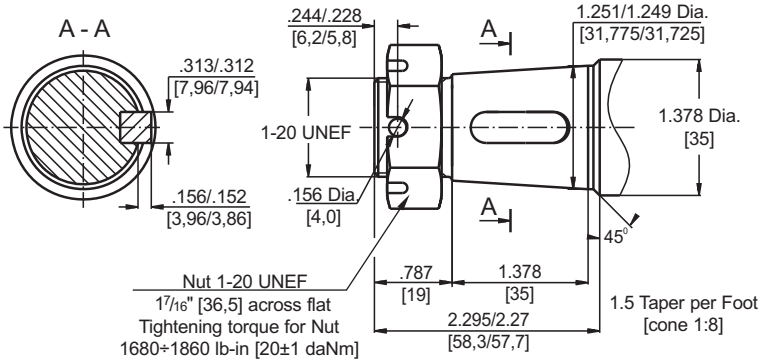

Requirement max. Torque must not be exceeded.

ORDER CODE

	1	2	3	4	5	6		7	8	9	10	10	12
RWB							/						

Pos.1 - Displacement code

50	- 3.14 in³/rev [51,5 cm³/rev]
80	- 4.90 in³/rev [80,3 cm³/rev]
100	- 6.09 in³/rev [99,8 cm³/rev]
125	- 7.67 in³/rev [125,7 cm³/rev]
160	- 9.74 in³/rev [159,6 cm³/rev]
200	- 12.19 in³/rev [199,8 cm³/rev]
250	- 15.26 in³/rev [250,1 cm³/rev]
315	- 19.26 in³/rev [315,7 cm³/rev]
400	- 24.40 in³/rev [397,0 cm³/rev]

Pos.2 - Shaft Seal Version

omit - Standard shaft seal
U - High pressure shaft seal without check valves
UK - High pressure shaft seal with check valves

Pos.3 - Drain Port

omit - with drain port
1 - without drain port

Pos.4 - Port Size/Type [standard manifold to each]

2 - side ports, 2xG 1/2, G1/4, BSP thread, ISO 228
3 - side ports, 2xM22x1,5, M14x1,5, metric thread
4 - side ports, 2x7/8-14 UNF, O-ring, 7/16-20 UNF

Pos.5 - Special Features

omit - none
LL - Low Leakage
LSV - Low Speed Valve

Pos. 6 - Rotation

omit - Standard Rotation
R - Reverse Rotation

Pos. 7 - Drum type

A - Drum brake with bolts 4x1/2-20 UNF on 4 Dia. [ø101,6]
B - Drum brake with bolts 5x1/2-20 UNF on 4.5 Dia. [ø114,3]

Pos. 8 - Drum Bolt type

1 - 1/2-20 UNF-2A L= .787 in [20 mm]
2 - 1/2-20 UNF-2A L=1.259 in [32 mm]
3 - 1/2-20 UNF-2A L=2.362 in [60 mm]

Pos. 9 - Lever Type

V-1 - Vertical Brake Lever 2x.33 Dia. [ø8,4] - 2 in [50,8 mm]
V-2 - Vertical Brake Lever .338 Dia. [ø8,6] - 2.76 in [70 mm]

Pos.10 - Lever Position

R - Right
L - Left

Pos.11 - Option (Paint)*

omit - no Paint
P - Painted
PC - Corrosion Protected Paint

Pos.12 - Design Series

omit - Factory specified

The hydraulic motor-brakes are mangano-phosphatized as standard.

HYDRAULIC MOTOR-BRAKES SW500B350V

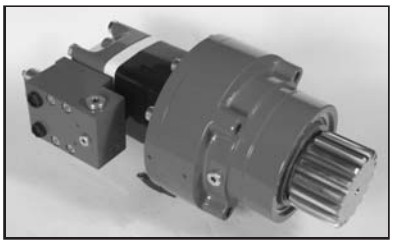

APPLICATION

» Wheel drives
» Conveyors
» Rotators
» Positioners
» Winches
» Swing drives
» Door openers

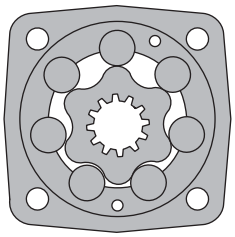

CONTENTS

Specification data 28
Dimensions and mounting 29
Permissible shaft loads 29
Function diagrams 30

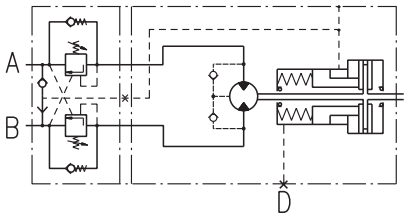

SPECIFICATION DATA

Type		SW500B350V
Displacement, in³/rev [cm³/rev]		29 [475,3]
Max. Speed,	Cont.	16
RPM	Int.*	25
Max. Torque,	Cont.	7260 [82]
lb-in [daNm]	Int.*	8420 [95]
Max. Output,	Cont.	1.3 [0,9]
HP [kW]	Int.*	3.3 [2,4]
Max. Pressure Drop,	Cont.	1800 [125]
PSI [bar]	Int.*	2100 [145]
Max. Oil Flow,	Cont.	2 [8]
GPM [lpm]	Int.*	3 [12]
Max. Return Pressure without Drain Line or Max. Pressure in Drain Line, PSI [bar]		1450 [100]
Min. Starting Torque,	At max. press. drop Cont.	6400 [72]
lb-in [daNm]	At max. press. drop Int.*	6650 [75]
Min. Speed, RPM**		5
Static Torque for the Brake*, lb-in [daNm]**		14 515 [164]
Release Pressure ±10%,	initial	363...406 [25...28]
PSI [bar]	full	449.6 [31]
Max. Steering Pressure, PSI [bar]		3553 [245]
Max. Pressure in Drain Space for the Brake, PSI [bar]		7 [0,5]
Pilot Ratio for the Valve		4,25:1

* Intermittent operation: the permissible values may occur for max. 10% of every minute.
** For speeds of 5 RPM lower than given, consult factory or your regional manager.
*** Static torque is obtained at working pressure - 0 PSI [0 bar].

Space is filled with 7.63±1.22 in³ [125±20 cm³] mineral oil HLP (DIN 51524) or HM (ISO 6743/4).

DIMENSIONS AND MOUNTING

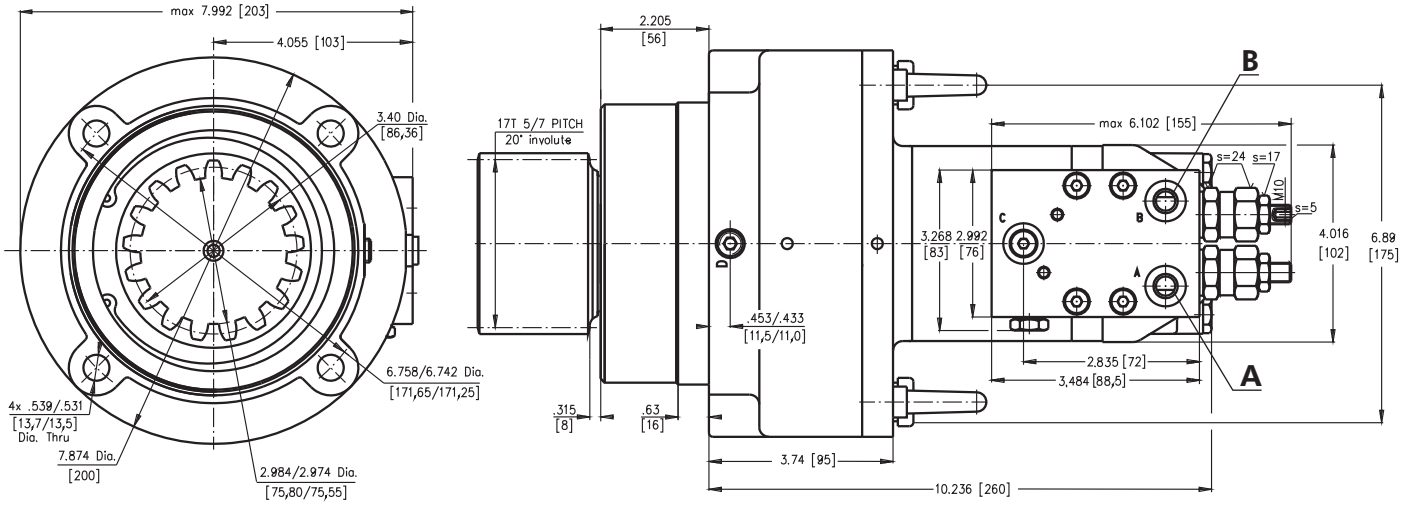

A,B: 7/16-20 UNF
D : 1/4-18 NPTF

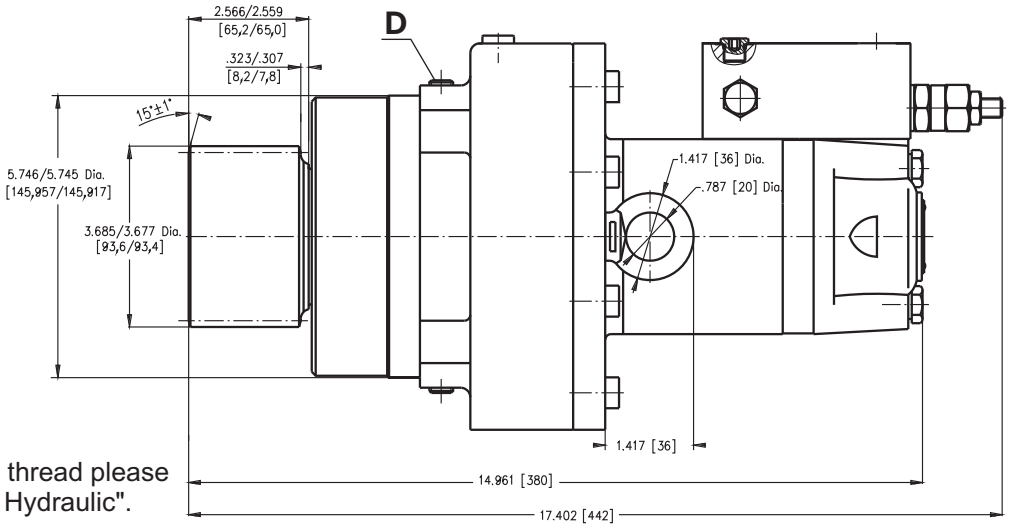

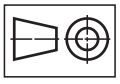
in [mm]

Note: For different port's thread please contact with "M+S Hydraulic".

PERMISSIBLE SHAFT LOADS

The curve applies to a B10 bearing life of 3000 hours at 40 RPM.

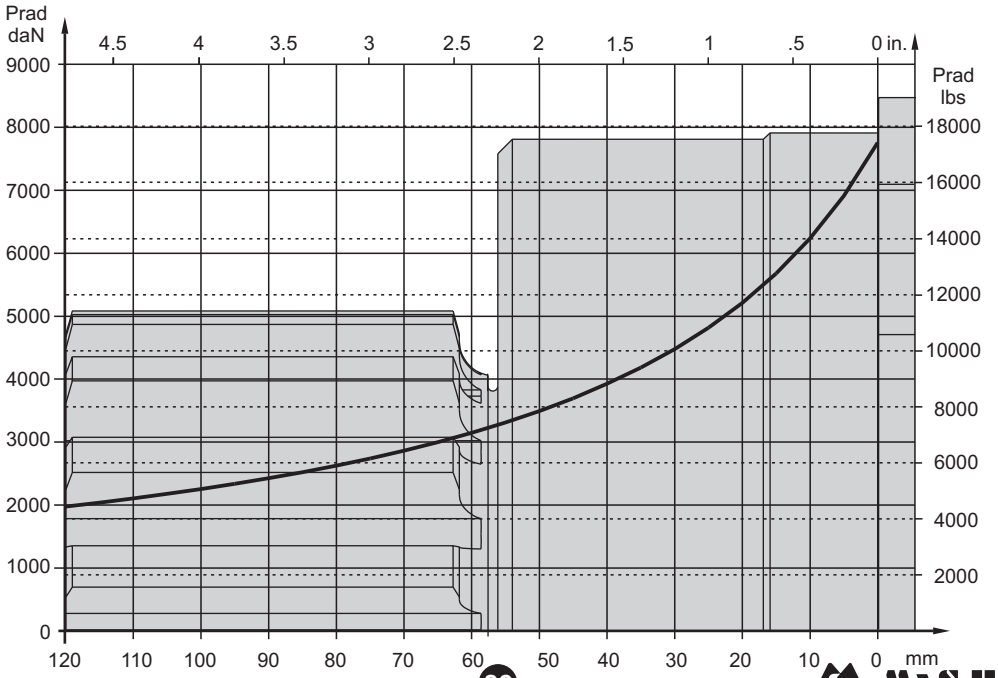

FUNCTION DIAGRAMS

SW 500

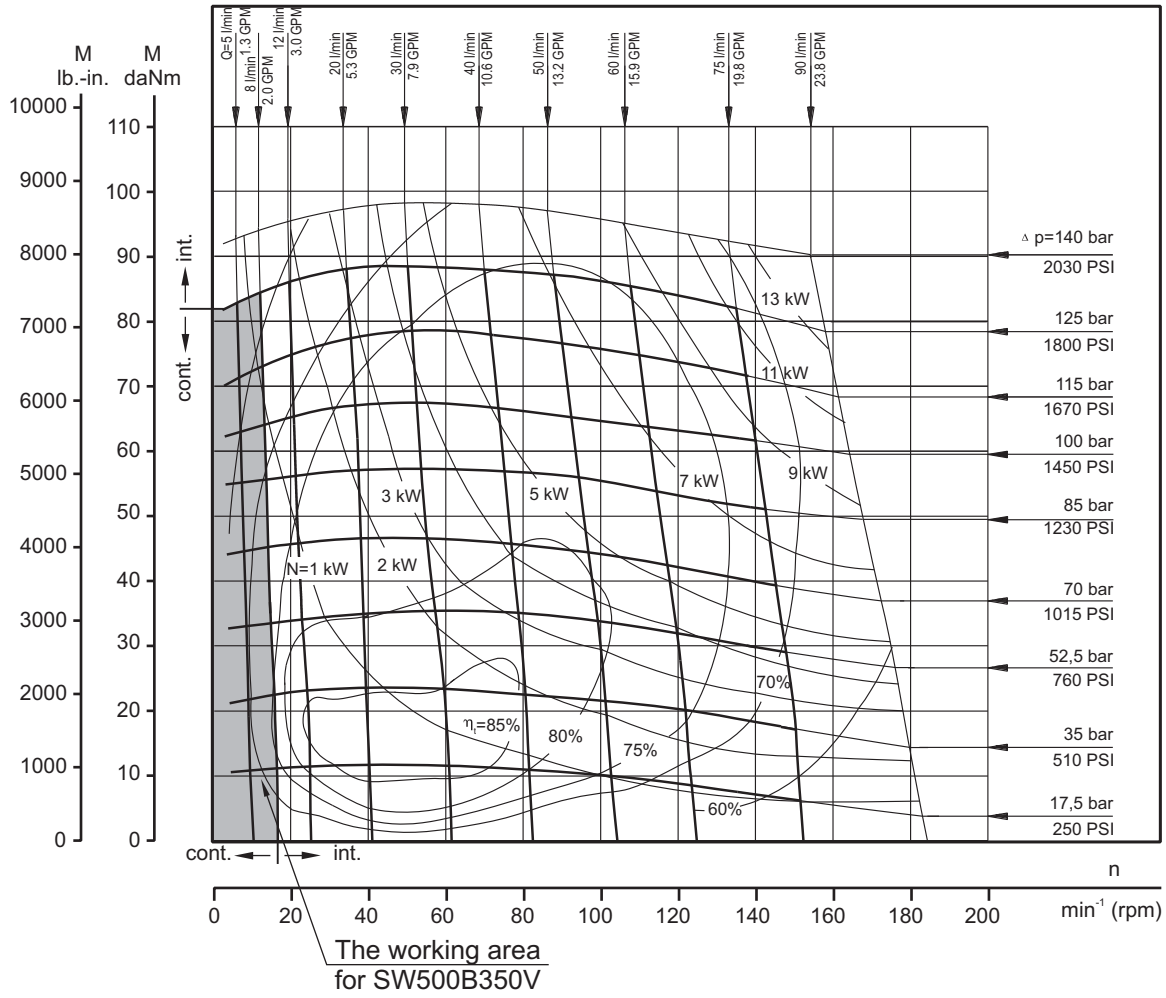

ORDER CODE

1		2	3	4	5	6	7	8
S	W	500	B	350		V		

Pos.1 - Type

S - Motor MLHS

Pos.2 - Displacement code

Pos.3 - Brake

Pos.4 - Brake Type

Pos.5 - Shaft Extension

omit - 17T PITCH splined

Pos.6 - Valve

Pos.7 - Special Features (see page 55)

Pos.8 - Design Series

omit - Factory specified

The motor-brakes are mangano-phosphatized as standard.

HYDRAULIC MOTOR-BRAKES TW500B350...V

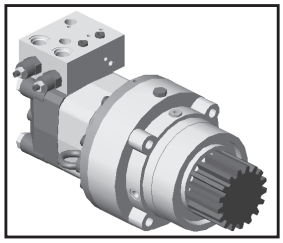

APPLICATION

» Wheel drives
» Conveyors
» Rotators
» Positioners
» Winches
» Swing drives
» Door openers

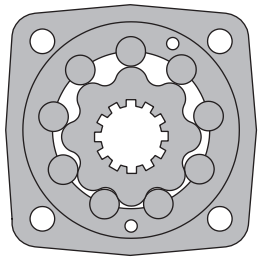

CONTENTS

Specification data 31
Dimensions and mounting 32
Function diagrams 33
Order code 33

Motor-Brake
Type **TW500B350V**

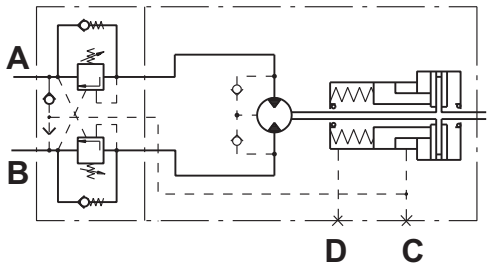

Motor-Brake
Type **TW500B350CV**

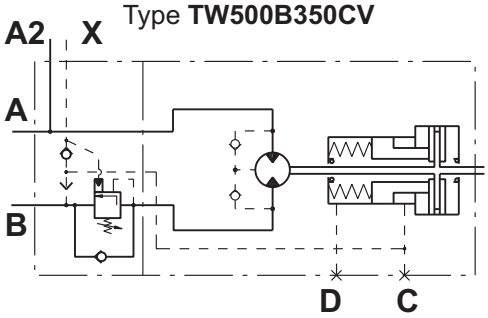

SPECIFICATION DATA

Type		TW500B350...
Displacement, in³/rev [cm³/rev]		29 [475]
Max. Speed, RPM	Cont.	40
	Int.*	60
Max. Torque, lb-in [daNm]	Cont.	10 000 [114]
	Int.*	12 000 [135]
Max. Output, HP [kW]	Cont.	5.4 [4,1]
	Int.*	9.39 [7,0]
Max. Pressure Drop, PSI [bar]	Cont.	2500 [170]
	Int.*	2900 [200]
Max. Oil Flow, GPM [lpm]	Cont.	5.3 [20]
	Int.*	9.2 [35]
Max. Return Pressure without Drain Line or Max. Pressure in Drain Line, PSI [bar]		1088 [75]
Min. Starting Torque, lb-in [daNm]	At max. press. drop Cont.	8400 [95]
	At max. press. drop Int.*	9940 [112]
Min. Speed, RPM**		5
Static Torque for the Brake*, lb-in [daNm]**		14 515 [164]
Release Pressure ±10%, PSI [bar]	initial	326...400 [22,5...27,5]
	full	406...493 [28...34]
Max. Steering Pressure, PSI [bar]		3553 [245]
Max. Pressure in Drain Space for the Brake, PSI [bar]		7 [0,5]
Pilot Ratio for the Valve		4,25:1

* Intermittent operation: the permissible values may occur for max. 10% of every minute.
** For speeds of 5 RPM lower than given, consult factory or your regional manager.
*** Static torque is obtained at working pressure - 0 bar [0 PSI].

DIMENSIONS AND MOUNTING

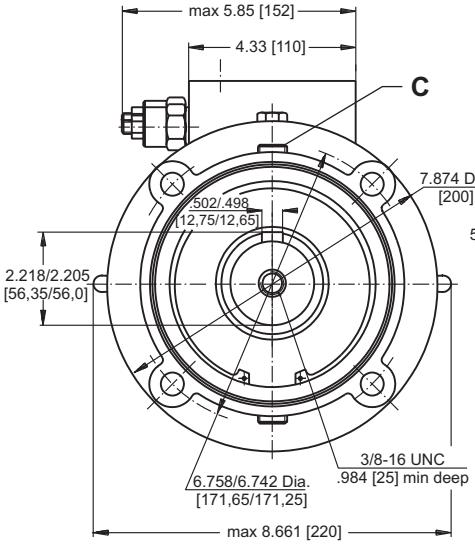

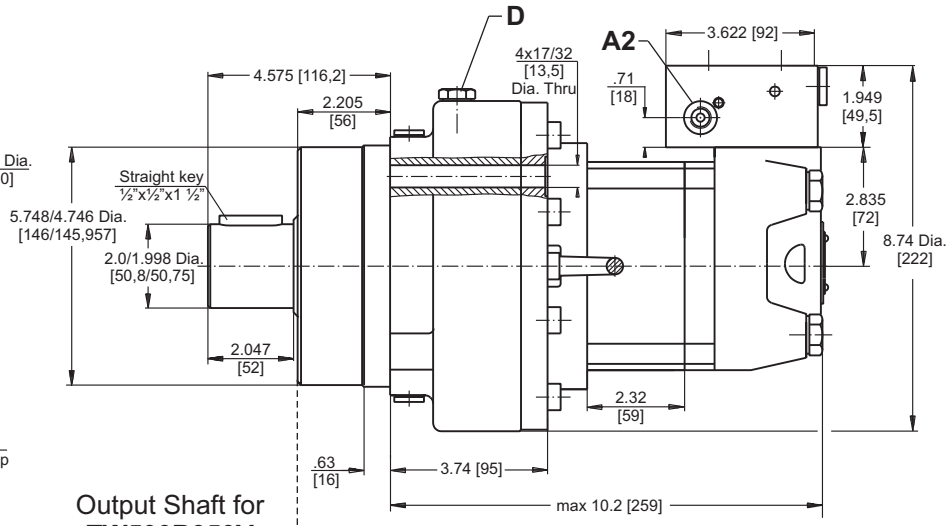

Output Shaft for
TW500B350V

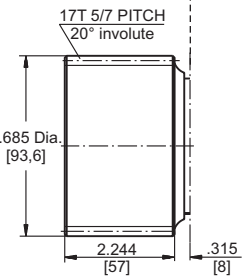

Valve Block for
TW500B350V

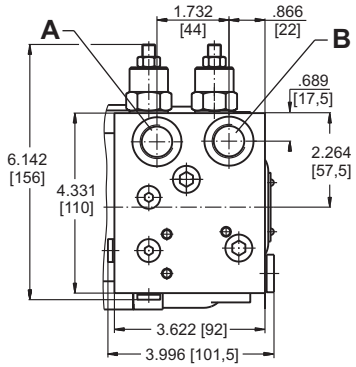

Valve Block for
TW500B350CV

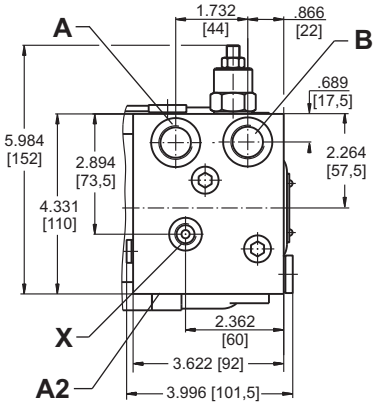

A,B : 2x7/8-14 UNF, .65 [17,5] deep
D : 7/16-20 UNF
C : G1/4
A2, X: 7/16-18 UNF, .475 [12] deep

Note: For different port's thread please contact with "M+S Hydraulic".

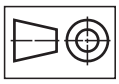

in [mm]

PERMISSIBLE SHAFT LOADS

The curve applies to a B10 bearing life of 3000 hours at 40 RPM.

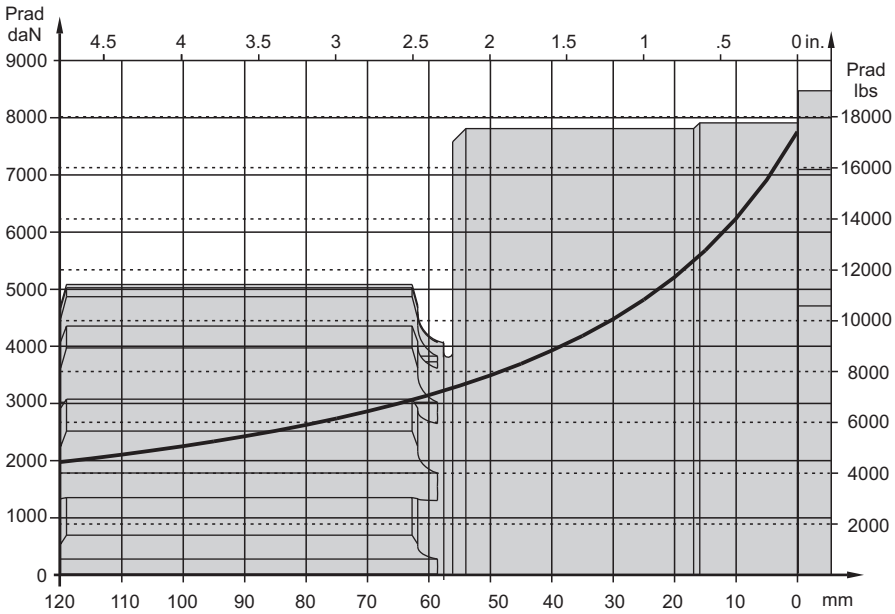

FUNCTION DIAGRAMS

TW 500

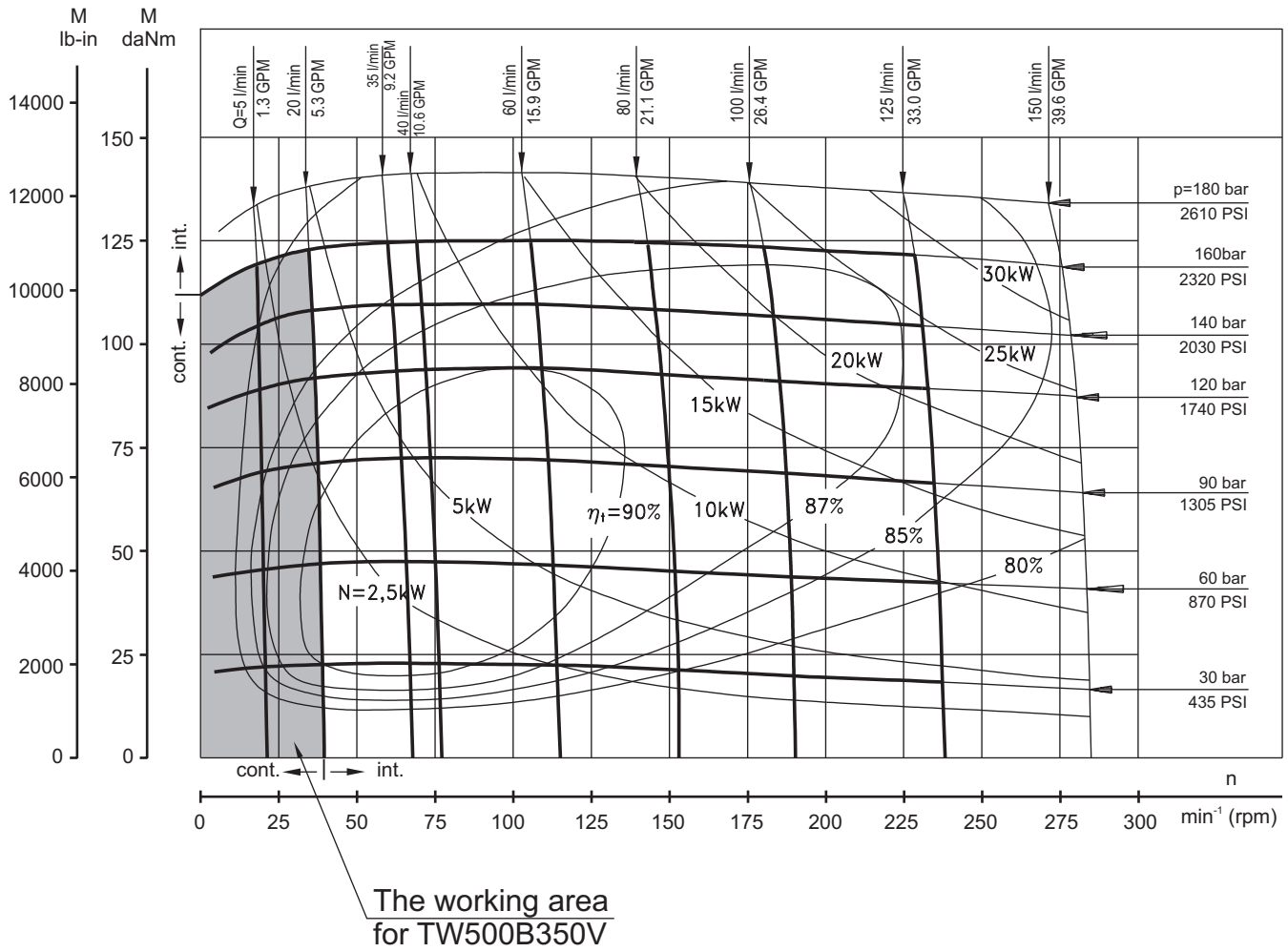

ORDER CODE

1		2	3	4	5	6	7	8
T	W	500	B	350		V		

Pos.1 - Type

T - Motor MLHT

Pos.2 - Displacement code

Pos.3 - Brake

Pos.4 - Brake Type

Pos.5 - Shaft Extension*

omit - 17T 5/7 pitch 20° involute

C - Straight key ½"x½"x1 ½"

Pos.6 - Valve

Pos.7 - Special Features (see page 55)

Pos.8 - Design Series

omit - Factory specified

The motor-brakes are mangano-phosphatized as standard.

VALVES FOR HYDRAULIC MOTORS

CONTENTS

Valves for MLHP, MLHR and MLHH type KPBR ... 35
Valves for MLHS type KPBS ... 36
Valves for MLHT type KPBT ... 37
Valves for MLHV type KPBV ... 38
Valves for MLHRW and HW type KPBW ... 39
Valves for HP and HR type KPBHR...E ... 40
Valves for HP and HR type KPBHR...D ... 41
Switch valves type KPWR and KPWS ... 42
Switch valves type KPWT and KPWV ... 43
Crossover Relief Valves ... 44
Valves for MLHP, MLHR and MLHH type KP...R ... 45
Valves for MLHS type KP...S ... 45
Valves for MLHT type KP...T ... 46
Valves for MLHV type KP...V ... 48
Valves for MLHRW and HW type KP...W ... 51
Cross Port Relief Valves ... 52
Order Code ... 53

OVERCENTER VALVES WITH BRAKE CONTROL

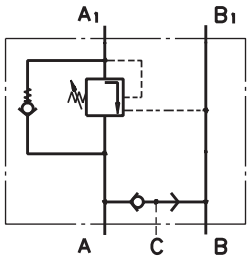

Single Overcenter Valves with Brake Control type KPB … AE

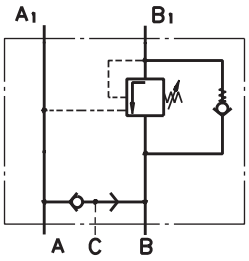

Single Overcenter Valves with Brake Control type KPB … BE

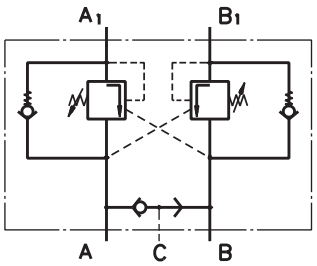

Dual Overcenter Valves with Brake Control type KPB … D

SPECIFICATION DATA

Parameters	Type											
	KPBR...E	KPBS...E	KPBR...D	KPBS...D	KPBW...E	KPBW...D	KPBHR...E	KPBHR...D	KPBT...E	KPBT...D	KPBV...E	KPBV...D
Flow Rate, GPM [lpm]	15.85 [60]								26.4 [100]		52.8 [200]	
Rated Pressure*, PSI [bar]	870÷4060 [60÷280]						1015÷3625 [70÷250]					
Pilot Ratio	4,25:1											
Weight, lb [kg]	6.658 [3,020]	6.39 [2,900]	6.746 [3,060]	6.437 [2,920]	7.724 [3,050]	6.923 [3,140]	5.071 [2,300]	5.291 [2,400]	11.905 [5,400]	12.787 [5,800]	20.283 [9,200]	21.495 [9,750]

*Pressure Settings are at flow rate of 1.3 GPM [5 lpm] and viscosity 150 SUS [32 mm²/s] at 122°F [50 °C].

PRESSURE LOSSES

KPBR..., KPBS..., KPBW... and KPBHR...

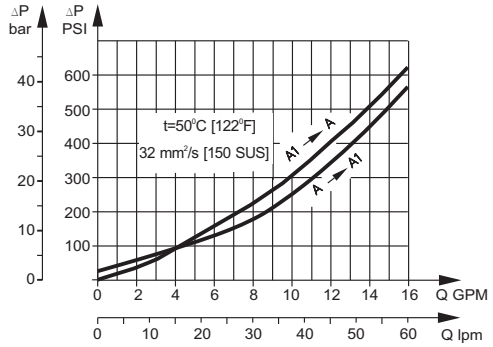

KPBT...

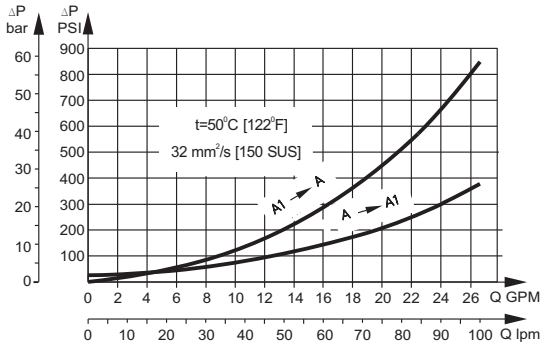

KPBV...

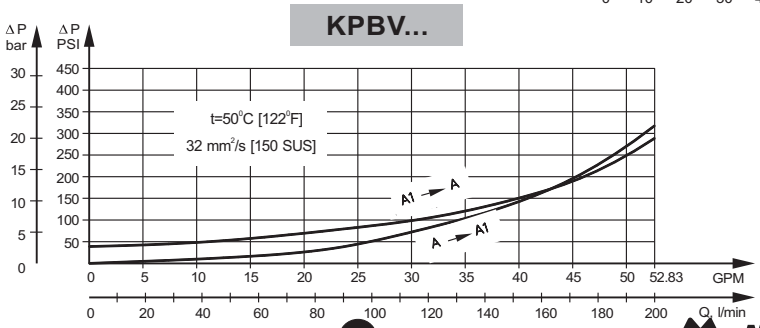

VALVES FOR MLHP, MLHR, MLHH HYDRAULIC MOTORS

SINGLE VALVE KPBR-250/1/E...

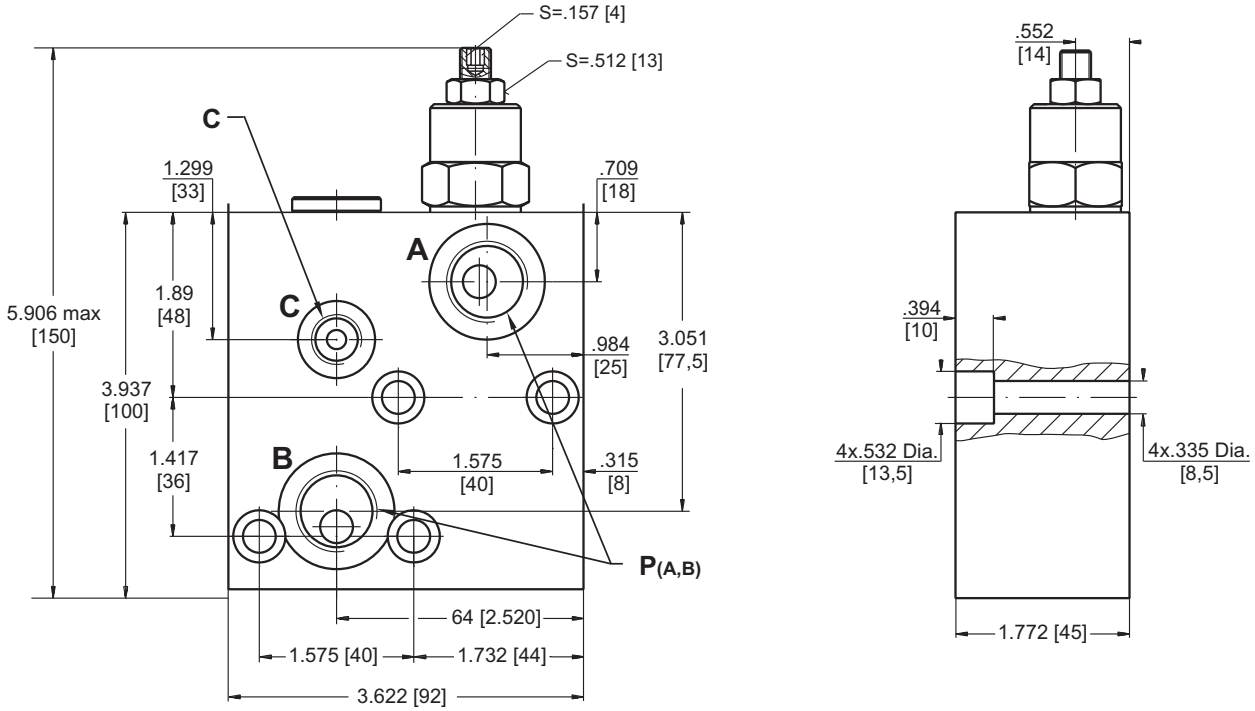

DUAL VALVE KPBR-250/1/D...

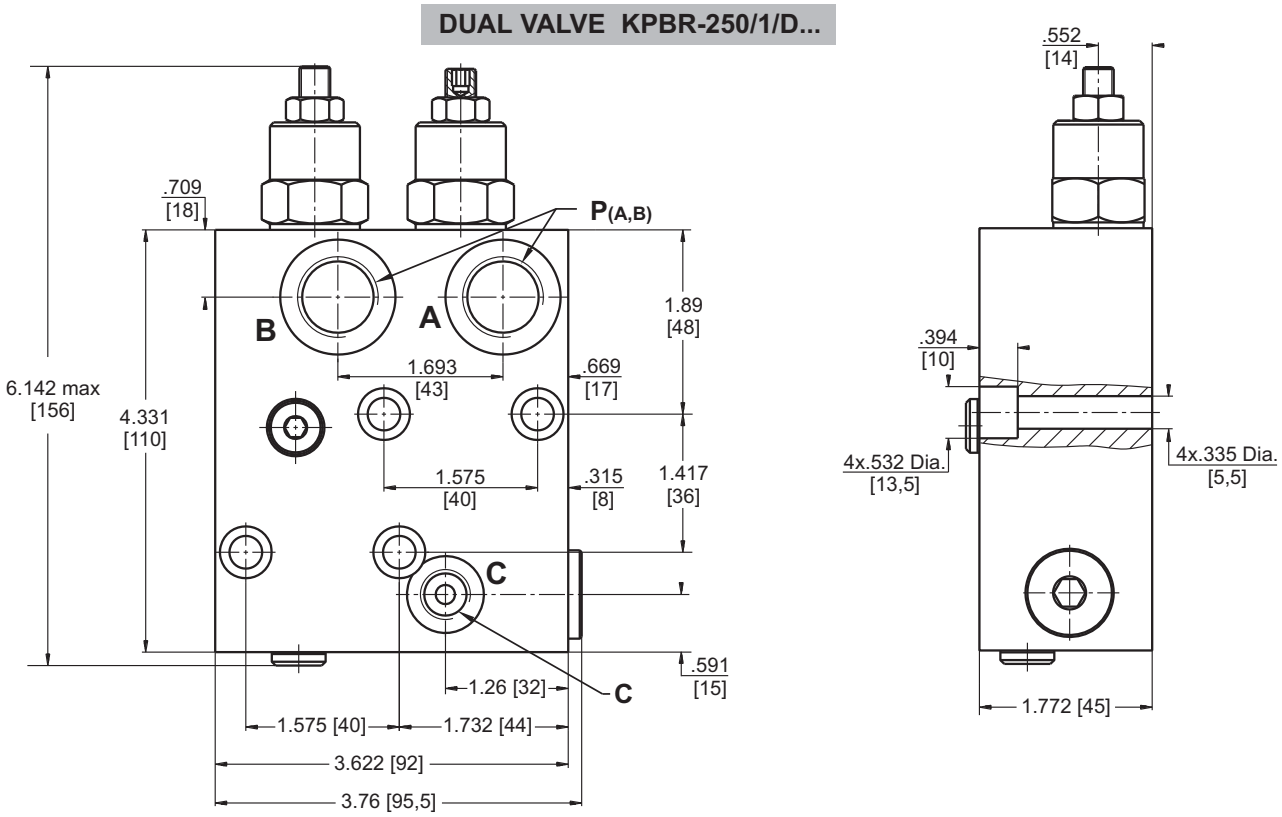

	Thread Ports - $P_{(A,B)}$	Thread Port - C
-	G1/2 .63 [16] depth	G1/4 .47 [12] depth
M	M22x1,5 .63 [16] depth	M14x1,5 .47 [12] depth
A	7/8 - 14 UNF O-ring .63 [16] depth	7/16 - 20 UNF O-ring .50 [12,7] depth

in [mm]

Note : KPBR Blocks are installed directly on MLHP, MLHR and MLHH Motors with four screws 5/16-18UNC,1.75 long ANSI B 18.3 or M8x45 - 8.8 DIN 912. Tightening torque 168÷150 lb-in [$1,7^{+0,2}$ daNm].

VALVES FOR MLHS HYDRAULIC MOTORS

SINGLE VALVE KPBS-250/1/E...

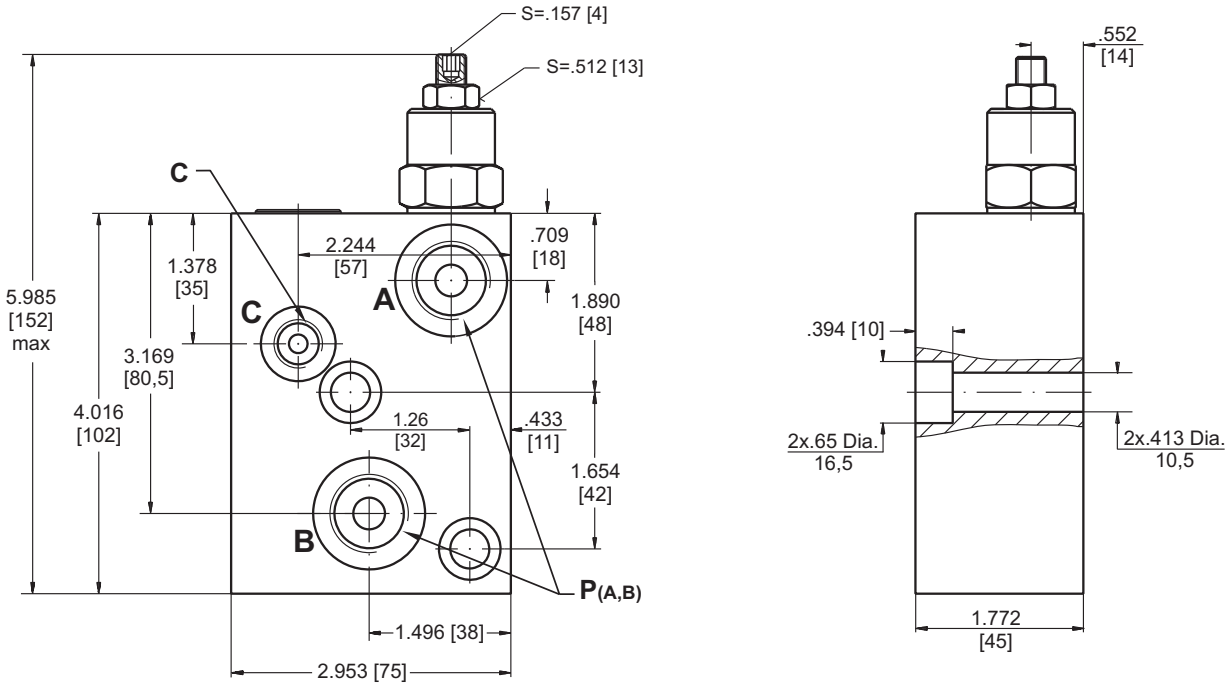

DUAL VALVE KPBS-250/1/D...

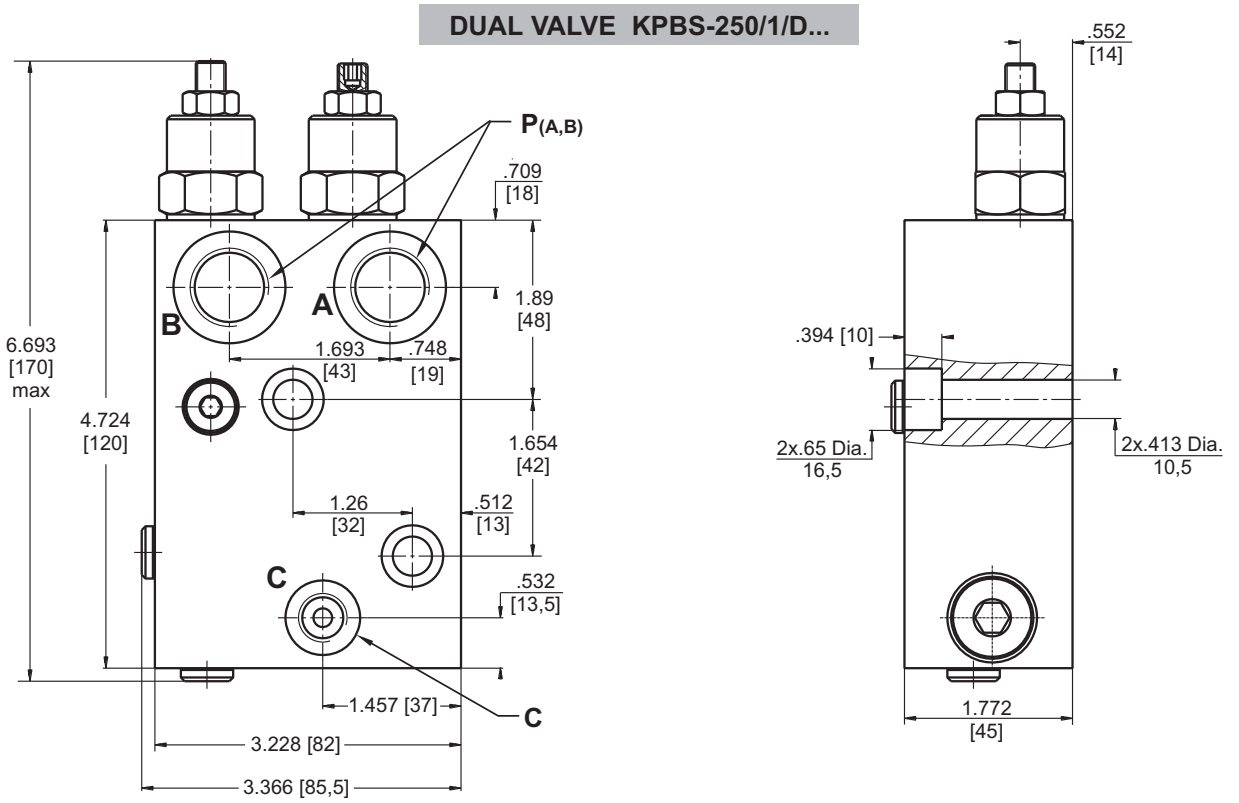

	Thread Ports - $P_{(A,B)}$	Thread Port - C
-	G1/2 .63 [16] depth	G1/4 .47 [12] depth
M	M22x1,5 .63 [16] depth	M14x1,5 .47 [12] depth
A	7/8 - 14 UNF O-ring .63 [16] depth	7/16 - 20 UNF O-ring .50 [12,7] depth

in [mm]

Note : KPBS Blocks are installed directly on MLHS Motors with two screws 3/8-16UNC, 1.75 long ANSI B 18.3 or M10x45 - 8.8 DIN 912. Tightening torque 336÷310 in-lb [3,5$^{+0,3}$ daNm].

VALVES FOR MLHT HYDRAULIC MOTORS

SINGLE VALVE KPBT-250/1/E...

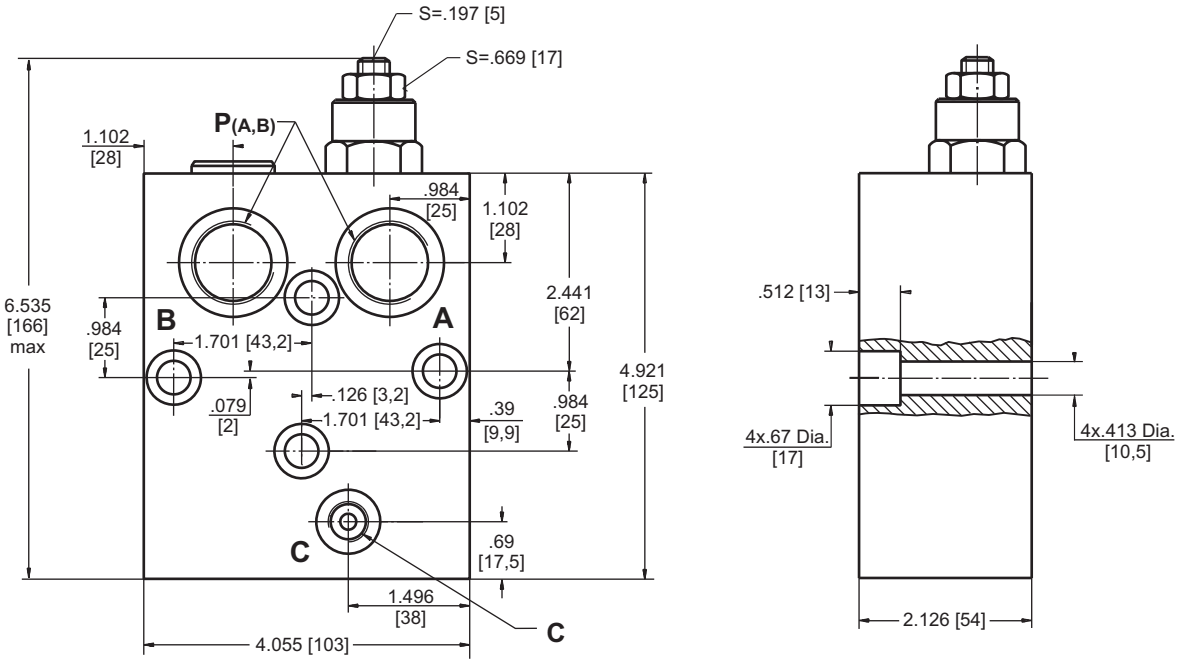

DUAL VALVE KPBT-250/1/D...

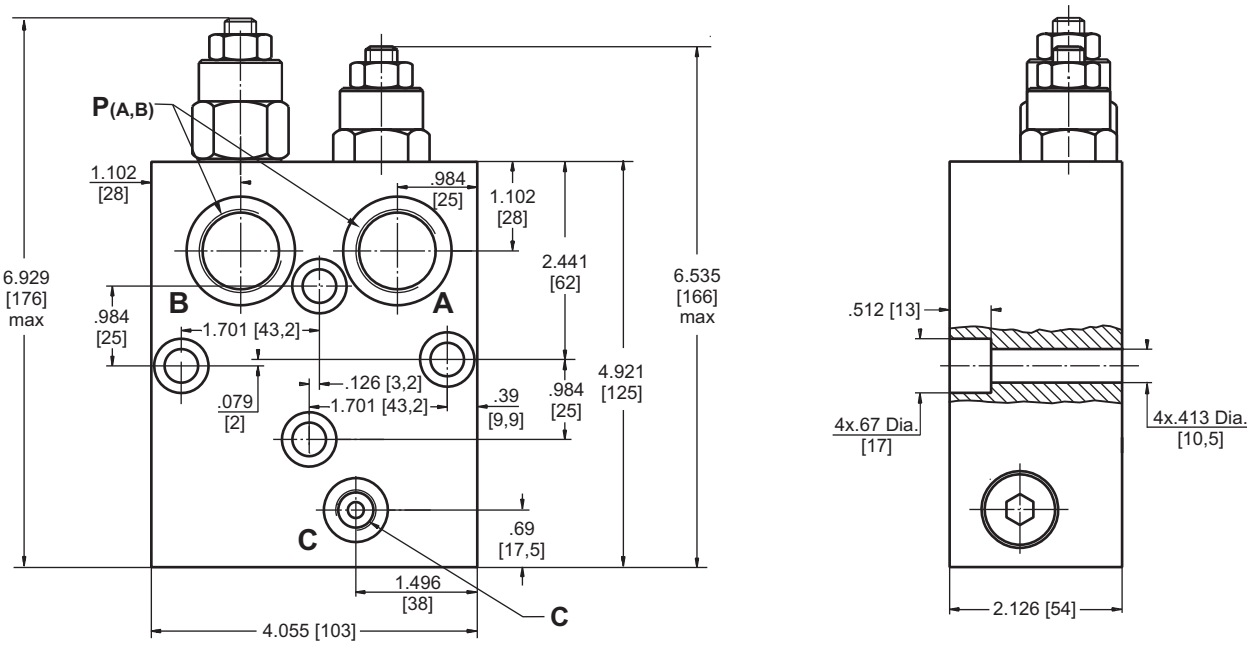

	Thread Ports - $P_{(A,B)}$	Thread Port - C
-	G3/4 .67 [17] depth	G1/4 .55 [14] depth
M	M27x2 .67 [17] depth	M14x1,5 .55 [14] depth
A	1 1/16-12 UN O-ring .67 [17] depth	7/16 - 20 UNF O-ring .50 [12,7] depth

in [mm]

Note : KPBT Blocks are installed directly on MLHT Motors with four screws M10x50 - 8.8 DIN 912. Tightening torque 336÷310 lb-in [$3,5^{+0,3}$ daNm].

VALVES FOR MLHV HYDRAULIC MOTORS

DUAL VALVE KPBV-250/1/D...

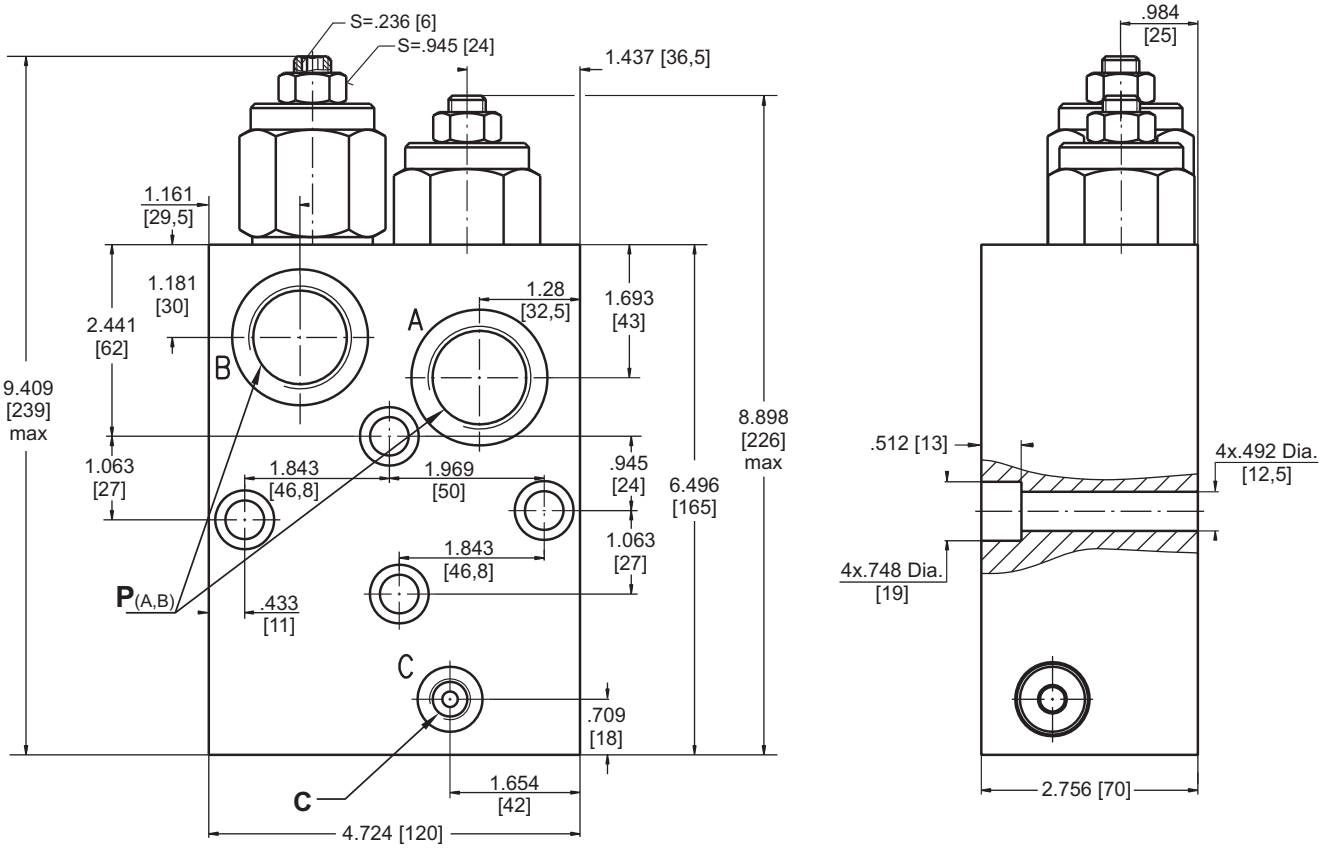

SINGLE VALVE KPBV-250/1/AE...

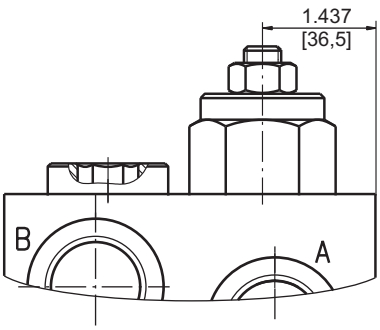

SINGLE VALVE KPBV-250/1/BE...

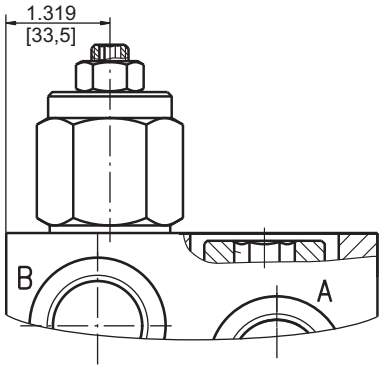

	Thread Ports - $P_{(A,B)}$	Thread Port - C
-	G 1 .79 [20] depth	G1/4 .55 [14] depth
M	M33x2 .79 [20] depth	M14x1,5 .55 [14] depth
A	1 5/16 - 12 UN O-ring .79 [20] depth	7/16 - 20 UNF O-ring .5 [12,7] depth

in [mm]

Note : KPBV Blocks are installed directly on MLHV Motors with four screws M12x70 - 8.8 DIN 912. Tightening torque 620÷575 lb-in [$6,5^{+0,5}$ daNm].

VALVES FOR MLHRW and HW HYDRAULIC MOTORS

DUAL VALVE KPBW-250/1/D...

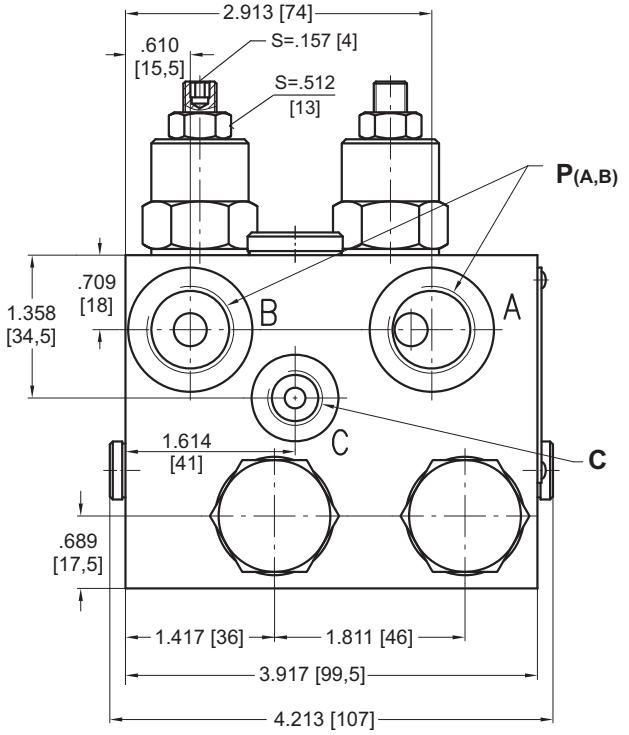

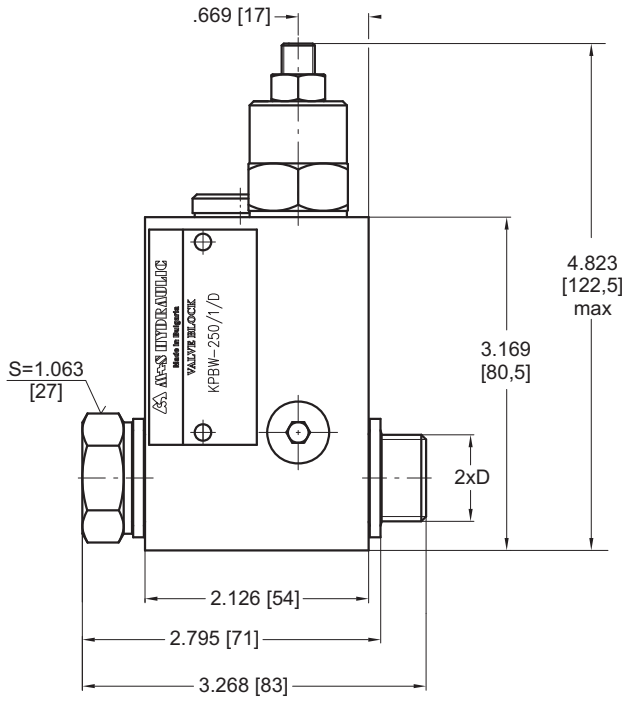

KPBW-...A

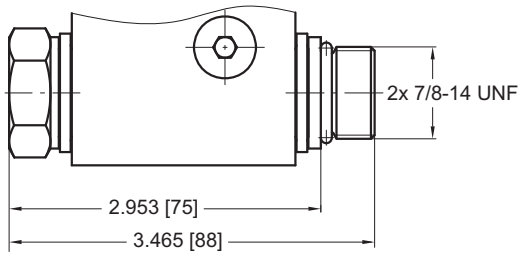

SINGLE VALVE KPBW-250/1/AE...

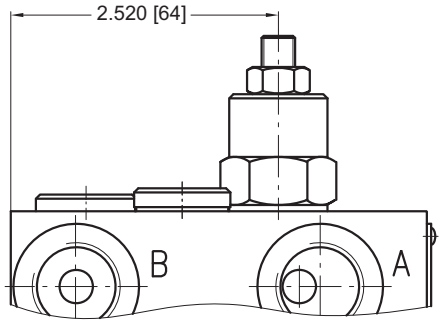

SINGLE VALVE KPBW-250/1/BE...

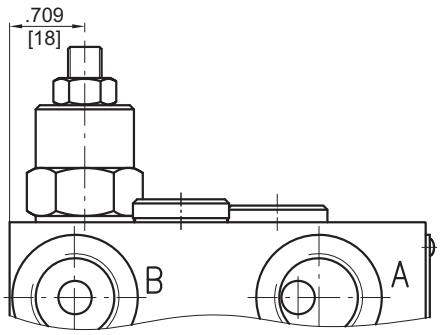

	Thread Ports - $P_{(A,B)}$	Thread Port - C	Thread Ports - D
-	G1/2 .63 [16] depth	G1/4 .47 [12] depth	G1/2 .47 [12] length
M	M22x1,5 .63 [16] depth	M14x1,5 .47 [12] depth	M22x1,5 .47 [12] length
A	7/8 - 14 UNF O-ring .63 [16] depth	7/16 - 20 UNF O-ring .50 [12,7] depth	7/8 - 14 UNF O-ring .51 [13] length

in [mm]

Note : KPBW Blocks assembly to MLHRW or HW motors is done with two screws (thread D) included in the valve set. Tightening torque 710 lb-in [8 daNm].

VALVES FOR HP, HR HYDRAULIC MOTORS

SINGLE VALVE KPBHR-250/1/BE...

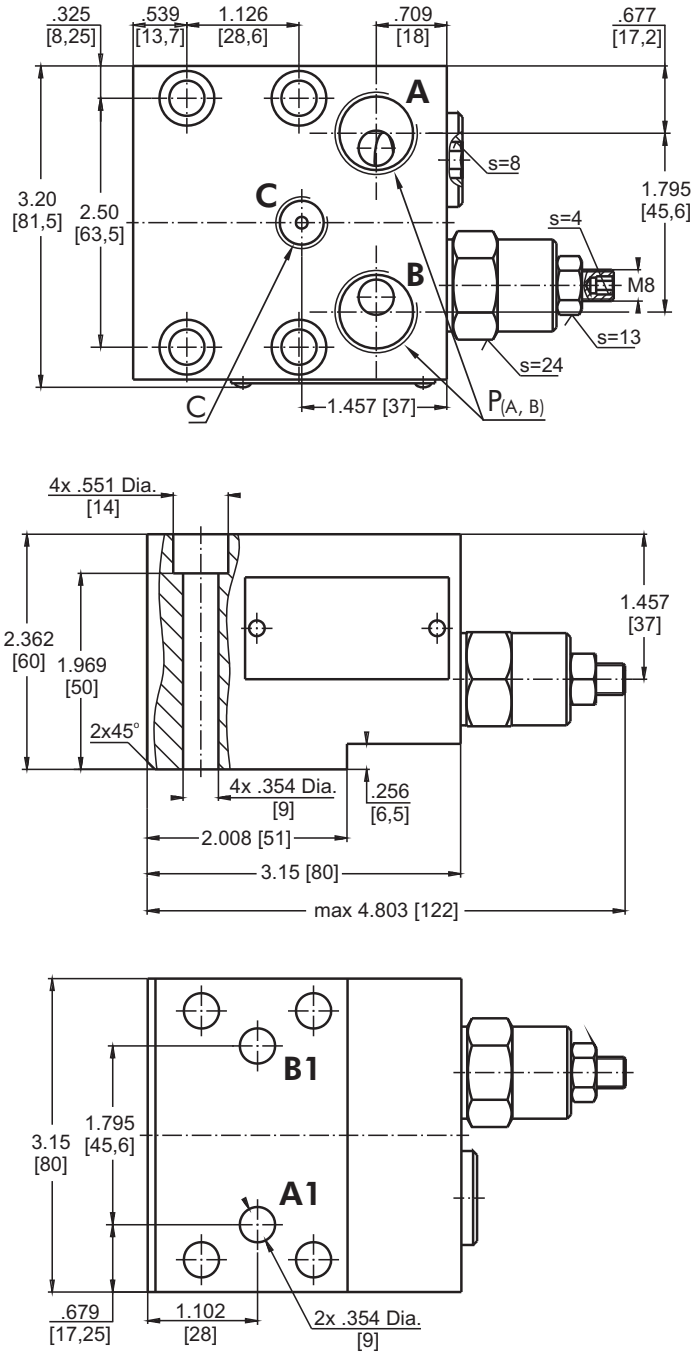

SINGLE VALVE KPBHR-250/1/AE...

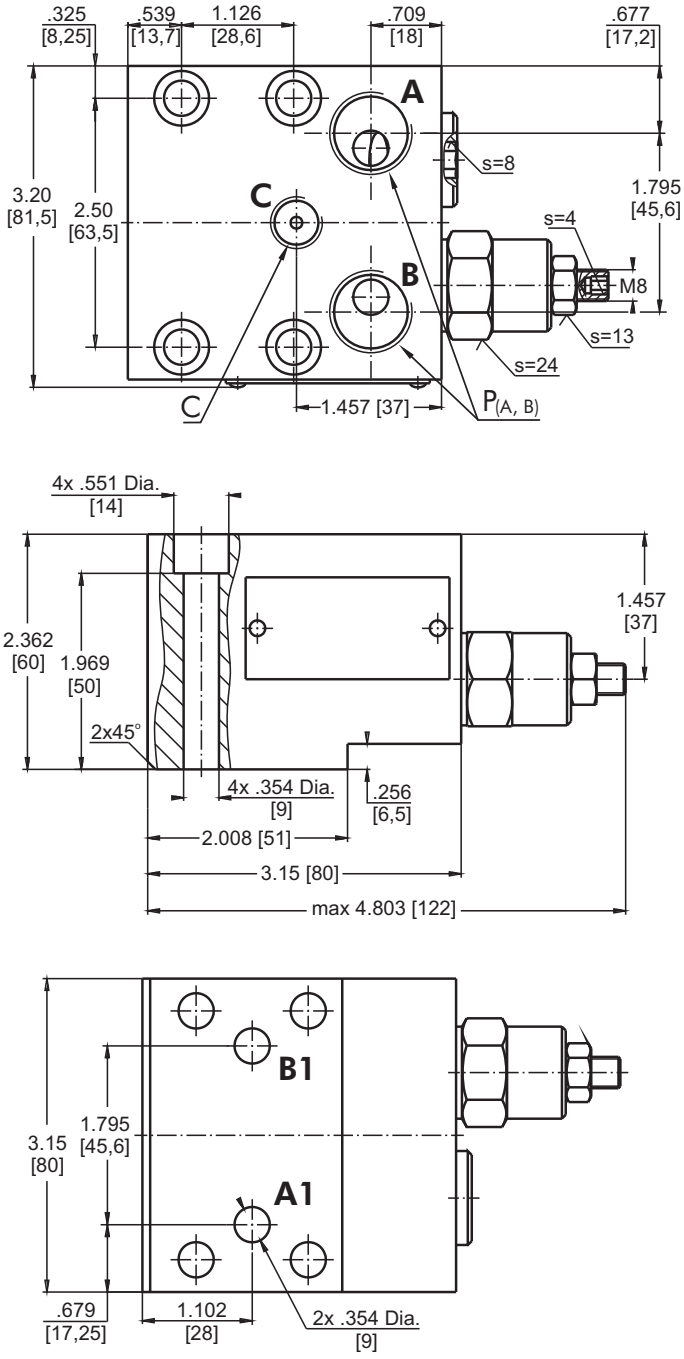

in [mm]

	Thread Ports - $P_{(A,B)}$	Thread Ports - C
A	7/8 - 14 UNF O-ring .67 [17] deep	7/16 - 20 UNF O-ring .50 [12,7] deep
-	G1/2 .67 [17] deep	G1/4 .55 [14] deep
M	M22x1,5 .67 [17] deep	M14x1,5 .55 [14] deep

Note : **KPBHR** Blocks are installed directly on HP and HR Motors with four bolts 5/16-18UNC, 2.5 long or M8x60 - 8.8 DIN 912. Tightening torque 177÷221 lb-in [$2{,}0^{+0{,}5}$ daNm].

VALVES FOR HP, HR HYDRAULIC MOTORS

DUAL VALVE KPBHR-250/1/D...

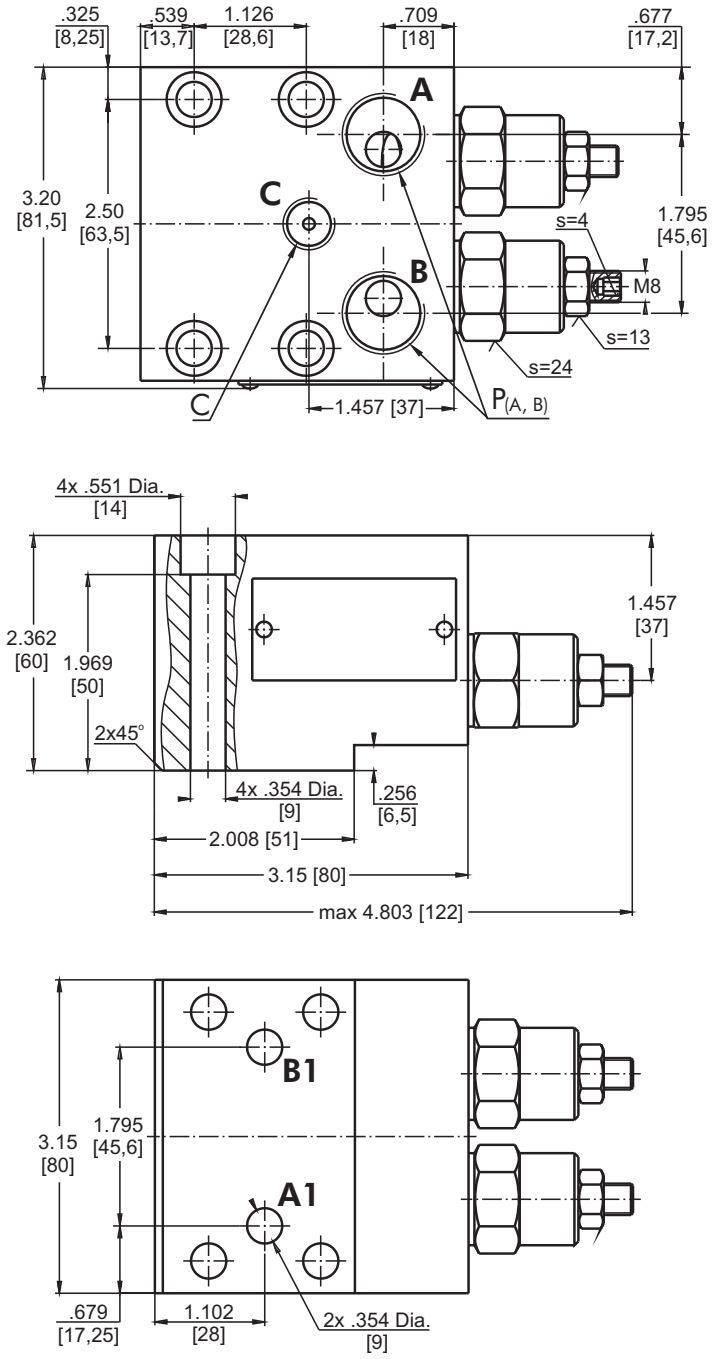

in [mm]

	Thread Ports - $P_{(A,B)}$	Thread Ports - C
A	7/8 - 14 UNF O-ring .67 [17] deep	7/16 - 20 UNF O-ring .50 [12,7] deep
-	G1/2 .67 [17] deep	G1/4 .55 [14] deep
M	M22x1,5 .67 [17] deep	M14x1,5 .55 [14] deep

Note : **KPBHR** Blocks are installed directly on HP and HR Motors with four bolts 5/16-18UNC, 2.5 long or M8x60 - 8.8 DIN 912. Tightening torque 177÷221 lb-in [$2,0^{+0,5}$ daNm].

SWITCH VALVES

SPECIFICATION DATA

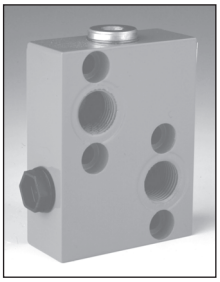

Parameters		Type	
		KPWR	KPWS
Flow Rate ,	GPM [lpm]	15.85	[60]
Rated Pressure ,	PSI [bar]	3625	[250]
Weight ,	lb	1.874	1.477
	[kg]	[0,850]	[0,670]

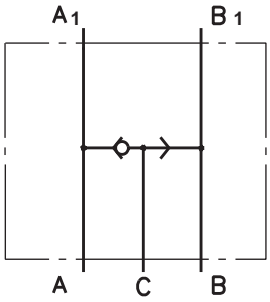

VALVE FOR MLHP, MLHR, MLHH HYDRAULIC MOTORS KPWR

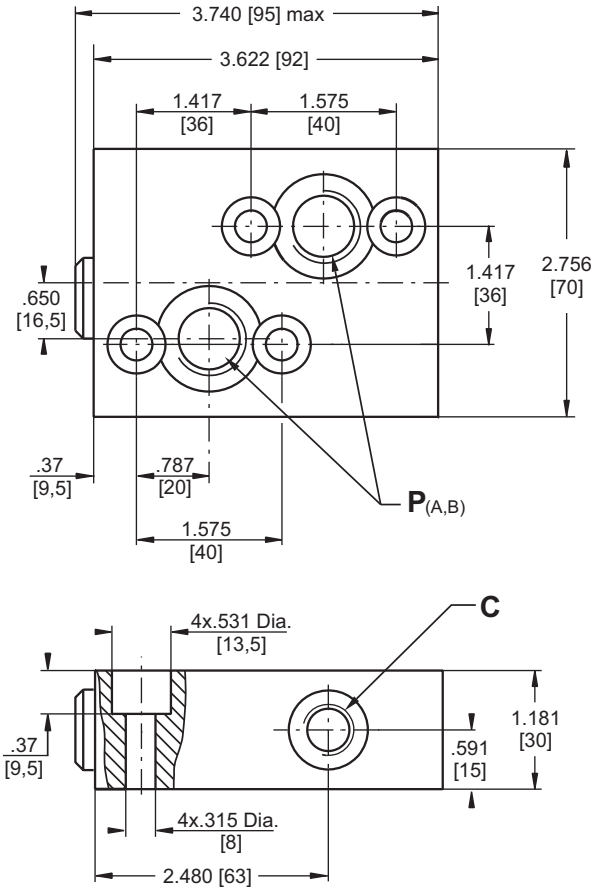

VALVE FOR MLHS HYDRAULIC MOTORS KPWS

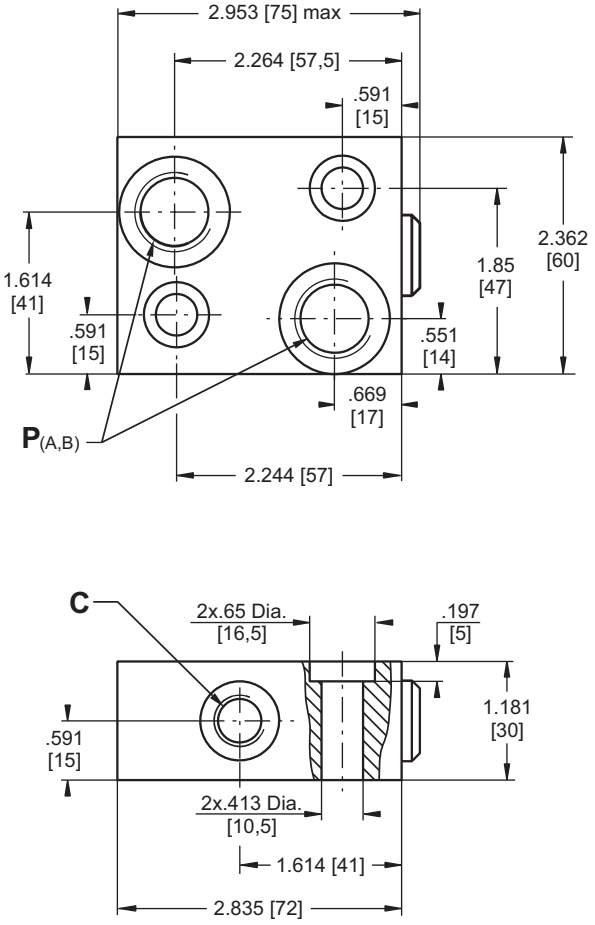

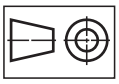
in [mm]

	Thread Ports - $P_{(A,B)}$	Thread Port - C
-	G1/2 .67 [17] depth	G1/4 .55 [14] depth
M	M22x1,5 .67 [17] depth	M14x1,5 .55 [14] depth
A	7/8 - 14 UNF O-ring .67 [17] depth	7/16 - 20 UNF O-ring .50 [12,7] depth

Note: **KPWR** Blocks are installed directly on MLHP, MLHR and MLHH Motors with four screws 5/16-18UNC, .049 [1.25] long ANSI B 18.3 or M8x30 - 8.8 DIN 912.
Tightening torque 177÷221 lb-in [$2,0^{+0,5}$ daNm].

KPWS Blocks are installed directly on MLHS Motors with two screws /8-16UNC, .059 [1.5] long ANSI B 18.3 or M10x35 - 8.8 DIN 912.
Tightening torque 336÷310 lb-in [$3,5^{+0,3}$ daNm].

SWITCH VALVE (continued)

SPECIFICATION DATA

Parameters	Type	
	KPWT	KPWV
Flow Rate , GPM [lpm]	26.4 [100]	52.8 [200]
Rated Pressure , PSI [bar]	3625 [250]	
Weight , lb	3.968	6.945
[kg]	[1,800]	[3,150]

VALVE FOR MLHT HYDRAULIC MOTORS KPWT

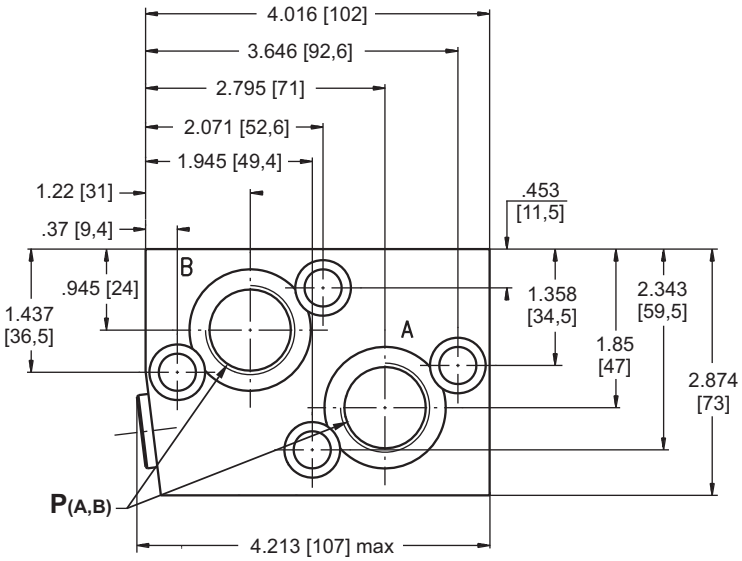

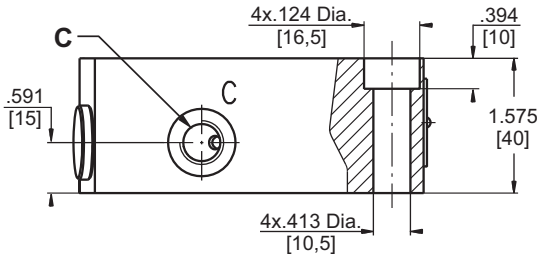

VALVE FOR MLHV HYDRAULIC MOTORS KPWV

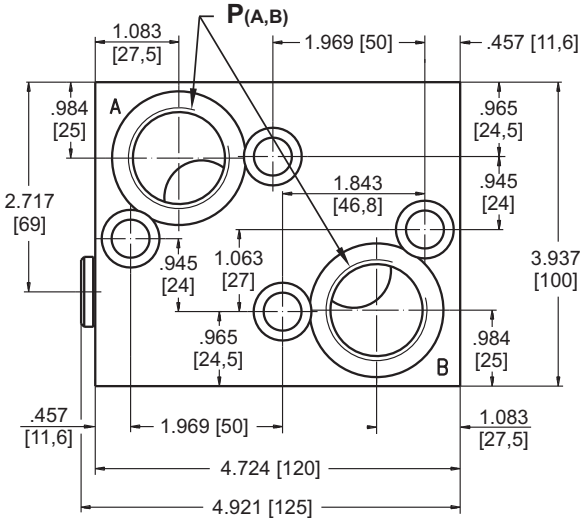

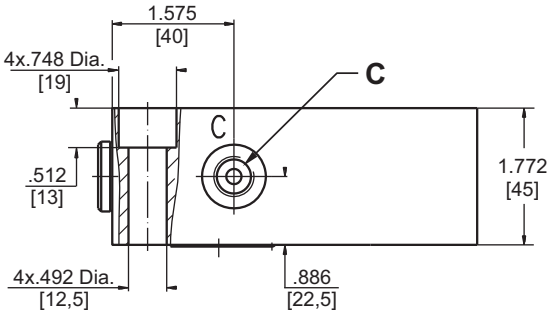

	Thread Ports - $P_{(A,B)}$	Thread Port - C
-	G3/4 .67 [17] depth	G1/4 .55 [14] depth
M	M27x2 .67 [17] depth	M14x1,5 .55 [14] depth
A	1 1/16-12 UN O-ring .67 [17] depth	7/16 - 20 UNF O-ring .50 [12,7] depth

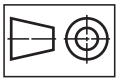

in [mm]

	Thread Ports - $P_{(A,B)}$	Thread Port - C
-	G 1 .79 [20] depth	G1/4 .55 [14] depth
M	M33x2 .79 [20] depth	M14x1,5 .55 [14] depth
A	1 5/16 - 12 UN O-ring .79 [20] depth	7/16 - 20 UNF O-ring .50 [12,7] depth

Note: KPWT Blocks are installed directly on MLHT Motors with four screws M10x40 - 8.8 DIN 912. Tightening torque 336÷310 lb-in [$3,5^{+0,3}$ daNm].

KPWV Blocks are installed directly on MLHV Motors with four screws M12x45 - 8.8 DIN 912. Tightening torque 620÷575 lb-in [$6,5^{+0,5}$ daNm].

CROSSOVER RELIEF VALVES

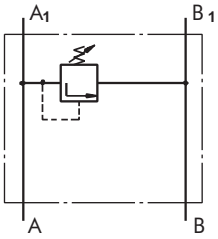

Single Crossover
Relief Valve
type KPE …

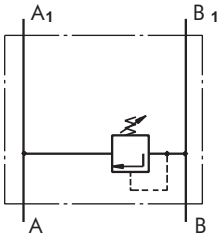

Single Crossover
Relief Valve
type KPE …

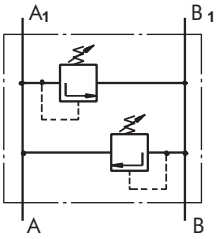

Dual Crossover
Relief Valve
type KPD …

SPECIFICATION DATA

Parameters	Type			
	KPER	KPDR	KPES	KPDS
Flow Rate , GPM [lpm]	15.85 [60]			
Pressure Range* , PSI [bar]	435÷1450; [30 ÷ 100];	725÷3050; [50 ÷ 210];	1160÷4350 [80 ÷ 300]	
Weight , lb [kg]	3.42 [1,55]		3.31 [1,50]	

*Pressure Settings are at flow rate of 1.32 GPM [5 lpm] and viscosity 150 SUS [32 mm^2/s] (122^{0}F [50 ^{0}C]).

Rated Pressure

A → 1450 PSI [100 bar]
B → 3050 PSI [210 bar]
C → 3625 PSI [250 bar]

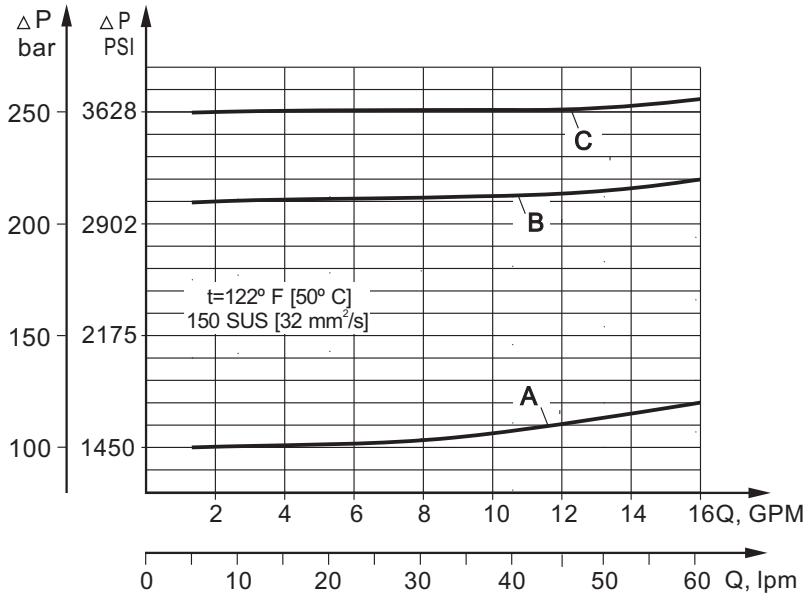

VALVES FOR MLHP, MLHR, MLHH HYDRAULIC MOTORS

DUAL VALVE KPDR

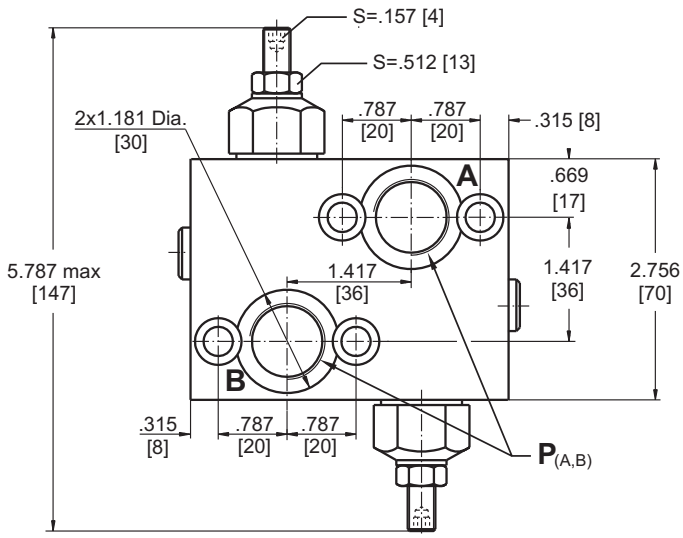

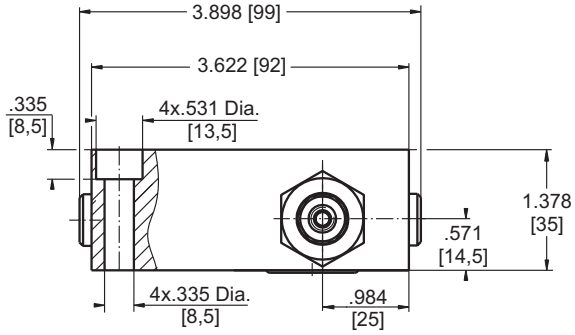

SINGLE VALVE KPER

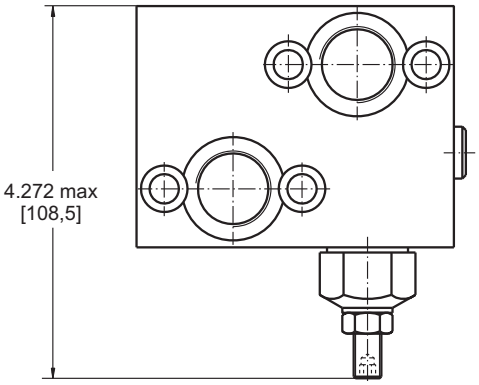

VALVES FOR MLHS HYDRAULIC MOTORS

DUAL VALVE KPDS

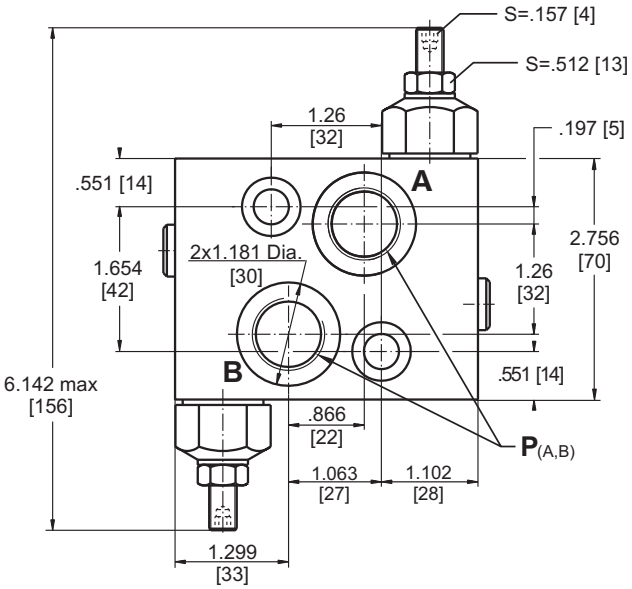

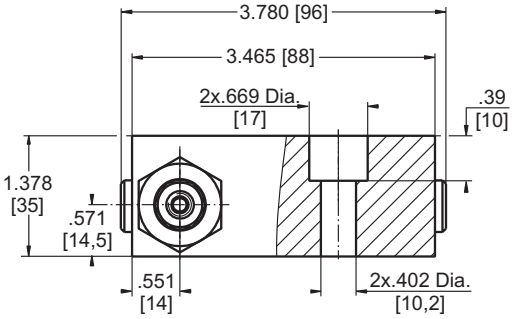

SINGLE VALVE KPES

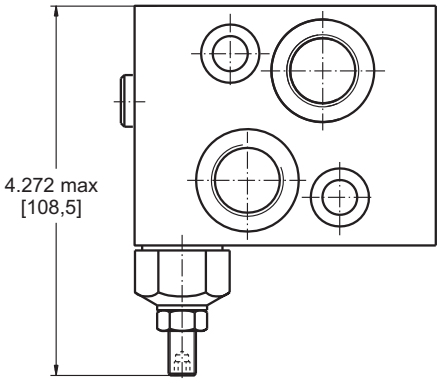

	Thread Ports - $P_{(A,B)}$
-	G1/2 .79 [20] depth
M	M22x1,5 .79 [20] depth
A	7/8 - 14 UNF O-ring .79 [20] depth

in [mm]

Note : **KPDR** and **KPER** Blocks are installed directly on MLHP, MLHR and MLHH Motors with four screws M8x35 - 8.8 DIN 912 or 5/16-18 UNC, 1.5 long ANSI B 18.3 . Tightening torque 177÷221 lb-in [$2{,}0^{+0{,}5}$ daNm].
KPDS and **KPES** Blocks are installed directly on MLHS Motors with two screws M10x35 - 8.8 DIN 912 or 3/8-16 UNC, 1.5 long ANSI B 18.3 . Tightening torque 310 lb-in [3,5 daNm].

VALVES FOR MLHT HYDRAULIC MOTORS

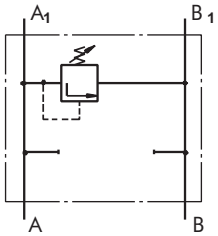

Single Crossover
Relief Valve
type KPEAT ...

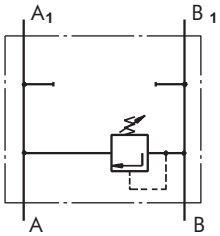

Single Crossover
Relief Valve
type KPEBT ...

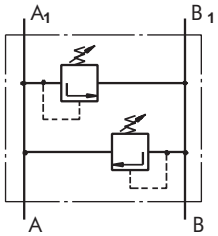

Dual Crossover
Relief Valve
type KPDT ...

SPECIFICATION DATA

Parameters	Type	
	KPE...T	KPDT
Flow Rate , GPM [lpm]	32 [120]	
Pressure Range* , PSI [bar]	1160÷3050 [80÷210]	
Weight , lb [kg]	11.24 [5,10]	12.21 [5,54]

*Pressure Settings are at flow rate of 1.32 GPM [5 lpm] and viscosity 150 SUS [32 mm^2/s] (122^{0}F [50 ^{0}C]).

Rated Pressure

A → 725 PSI [50 bar]
B → 1450 PSI [100 bar]
C → 2175 PSI [150 bar]
D → 3045 PSI [210 bar]

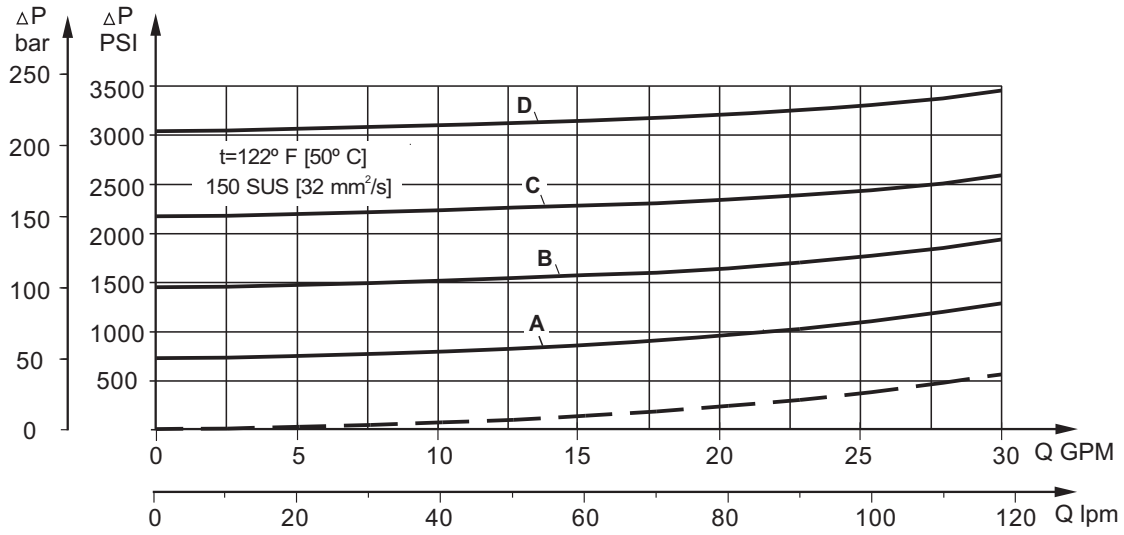

DUAL VALVE KPDT...

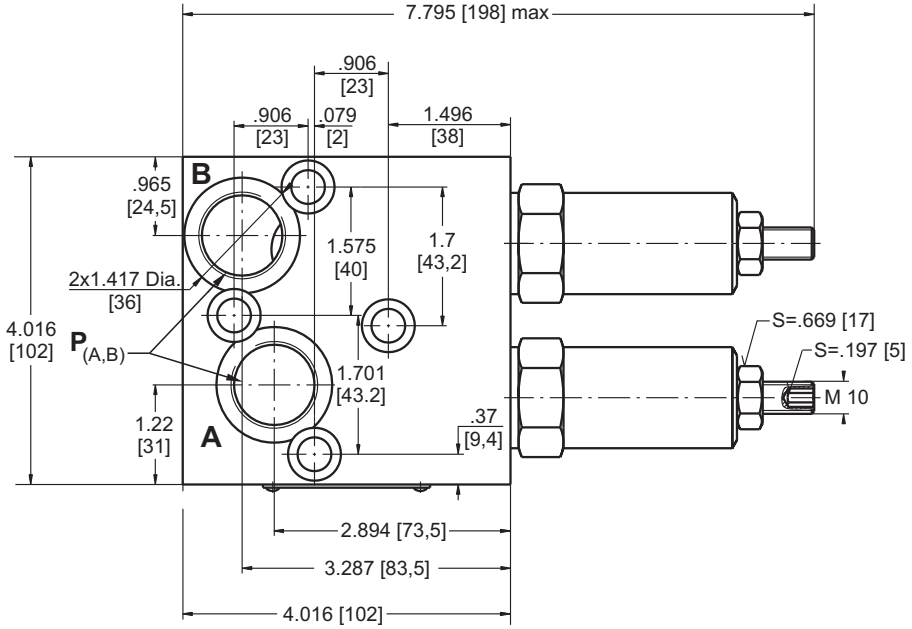

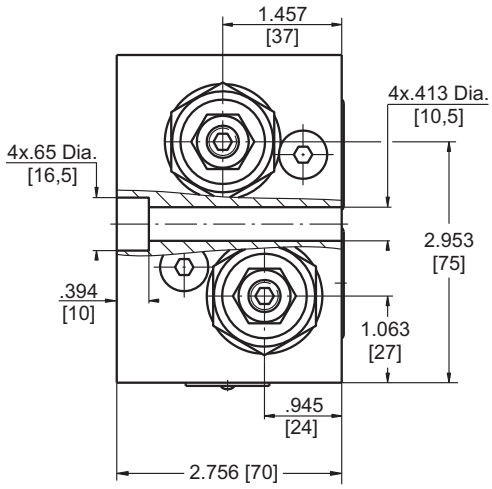

SINGLE VALVE KPEAT...

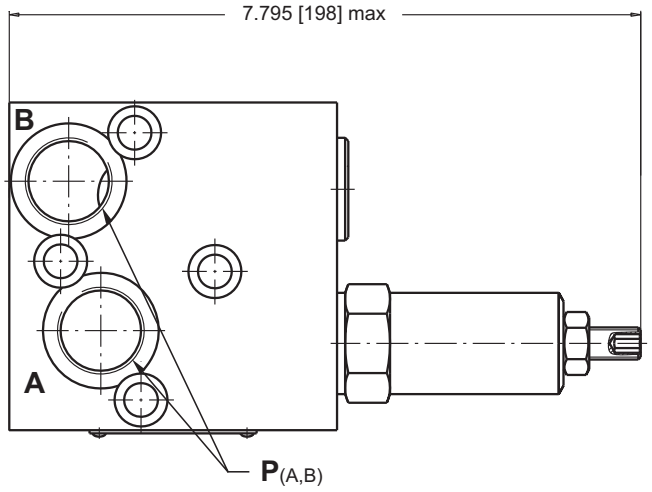

SINGLE VALVE KPEBT...

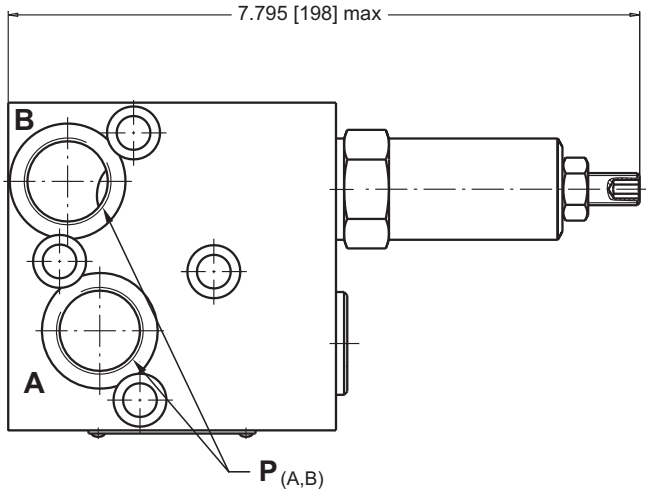

	Thread Ports - $P_{(A,B)}$
-	G3/4 .79 [20] depth
M	M27x2 .79 [20] depth
A	$1^{1}/_{16}$-12 UN O-ring .79 [20] depth

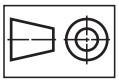

in [mm]

Note : KPDT and **KPE...T** Blocks are installed directly on MT Motors with four screws M10x70 - 8.8 DIN 912. Tightening torque 310 lb-in [3,5 daNm].

VALVES FOR MLHV HYDRAULIC MOTORS

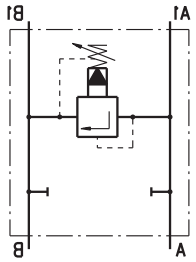

Single Crossover
Relief Valve
type KPEAV ...

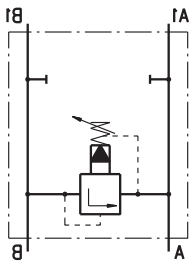

Single Crossover
Relief Valve
type KPEBV ...

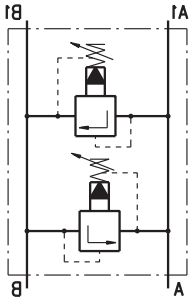

Dual Crossover
Relief Valve
type KPDV ...

SPECIFICATION DATA

Parameters	Type		
	KPEAV	KPEBV	KPDV
Flow Rate , GPM [lpm]	53 [200]		
Pressure Range* , PSI [bar]	145÷1450; 290÷3625 [10÷100]; [20÷250]		
Weight , lb [kg]	10.8 [4,90]	15.65 [7,10]	17.64 [8,00]

*Pressure Settings are at flow rate of 1.3 GPM [5 lpm] and viscosity 150 SUS [32 mm^2/s] (122^{0}F [50 ^{0}C]).

Rated Pressure

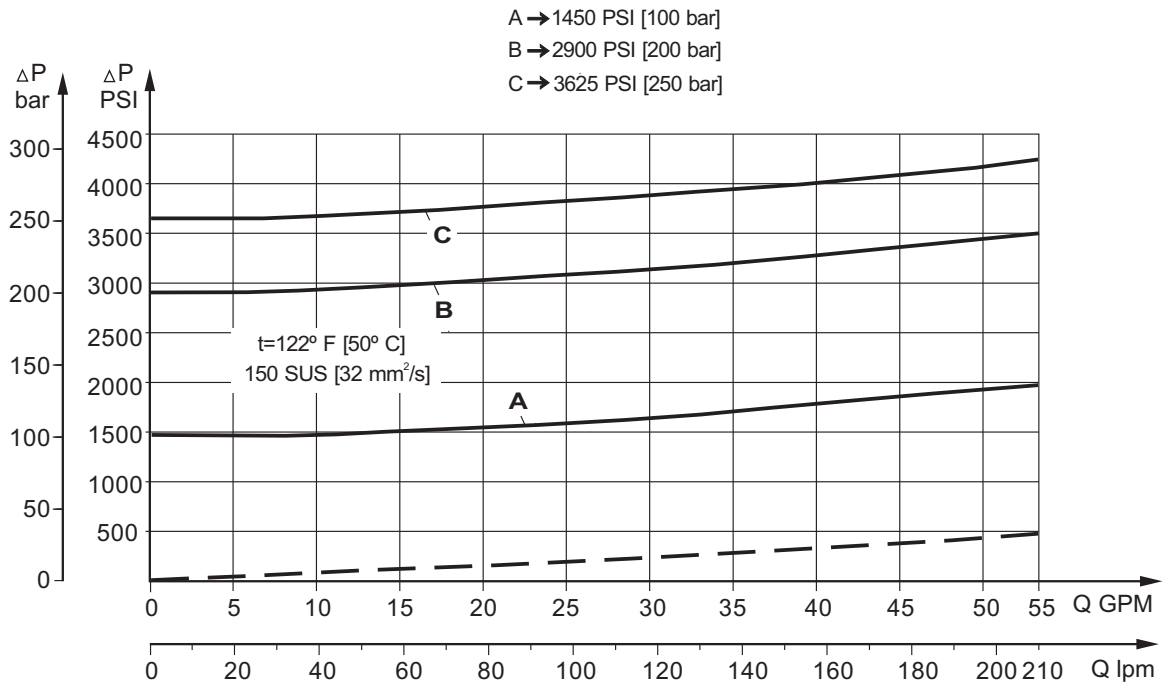

DUAL VALVE KPDV

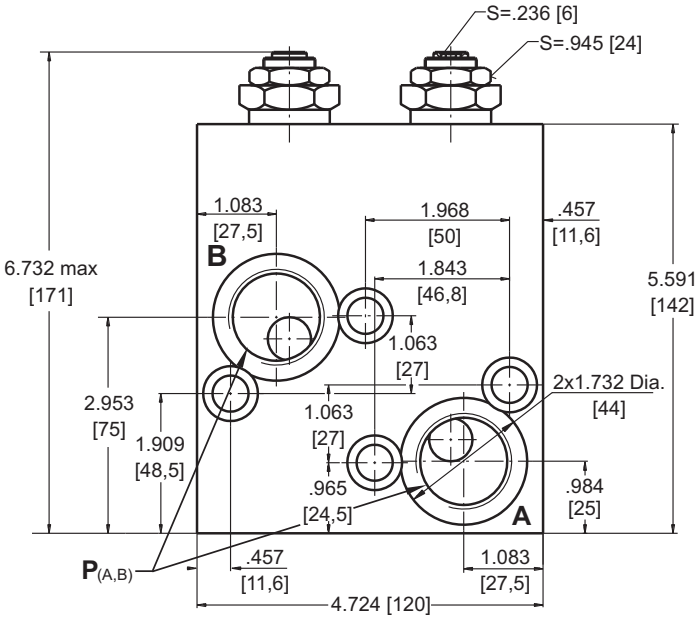

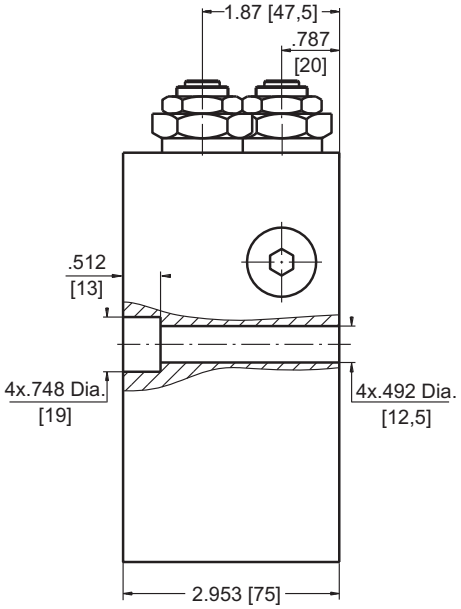

SINGLE VALVE KPEAV

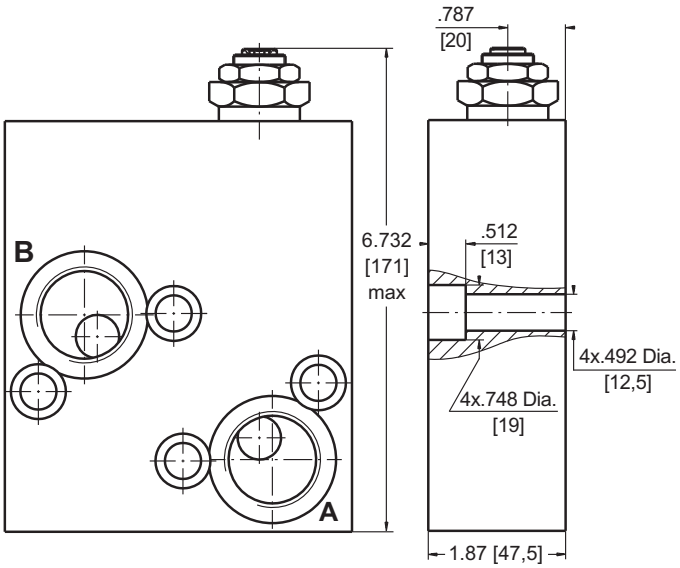

SINGLE VALVE KPEBV

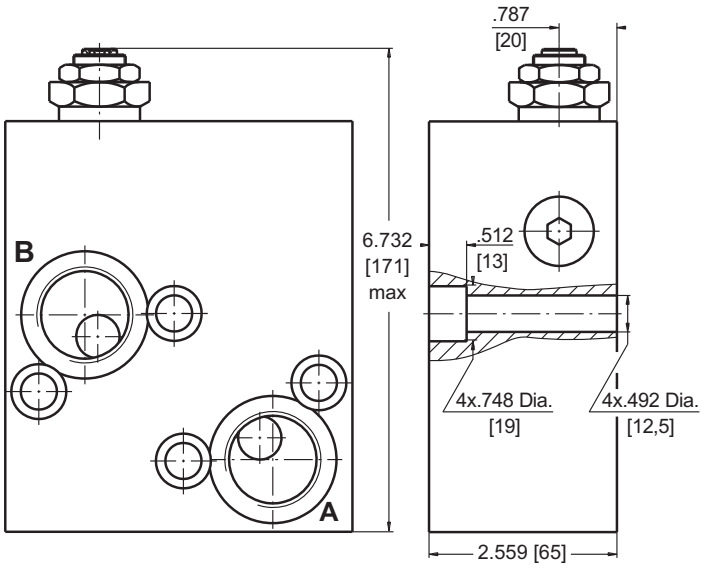

in [mm]

	Thread Ports - $P_{(A,B)}$
-	G1-A .79 [20] depth
M	M33x2 .79 [20] depth
A	1 5/16 -12 UN O-ring .79 [20] depth

Note : KPDV Blocks are installed directly on MLHV Motors with four screws M12x75 - 8.8 DIN 912.
KPEAV Blocks are installed directly on MLHV Motors with four screws M12x50 - 8.8 DIN 912.
KPEBV Blocks are installed directly on MLHV Motors with four screws M12x65 - 8.8 DIN 912.
Tightening torque 665 lb-in [7,5 daNm].

VALVES FOR MLHRW and HW HYDRAULIC MOTORS

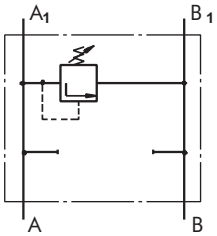

Single Crossover
Relief Valve
type KPEAW ...

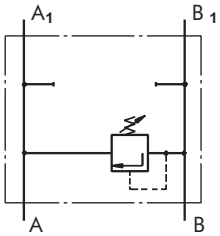

Single Crossover
Relief Valve
type KPEBW ...

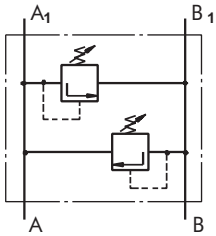

Dual Crossover
Relief Valve
type KPDW ...

SPECIFICATION DATA

Parameters	Type	
	KPE...W	KPDW
Flow Rate , GPM [lpm]	15.85 [60]	
Pressure Range*, PSI	75÷580; 435÷1450; 1160÷3625	
[bar]	[5 ÷ 40]; [30 ÷ 100]; [80 ÷ 250]	
Weight , lb	3.97	6.39
[kg]	[1,80]	[2,90]

*Pressure Settings are at flow rate of 1.32 GPM [5 lpm] and viscosity 150 SUS [32 mm^2/s] (122^0 F [50^0C]).

Rated Pressure

A → 1450 PSI [100 bar]
B → 3050 PSI [210 bar]
C → 3625 PSI [250 bar]

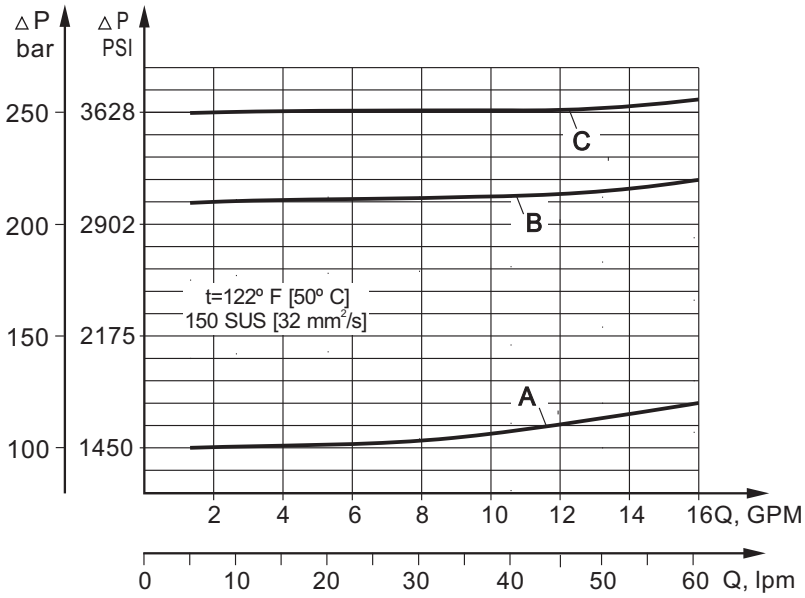

VALVES FOR MLHRW and HW HYDRAULIC MOTORS

DUAL VALVE KPDW...

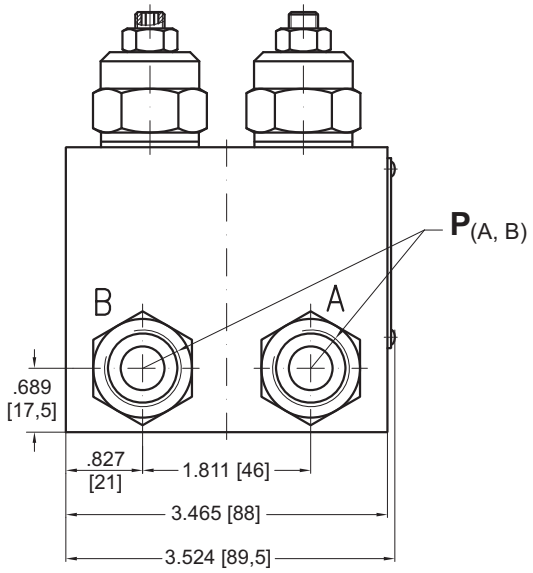

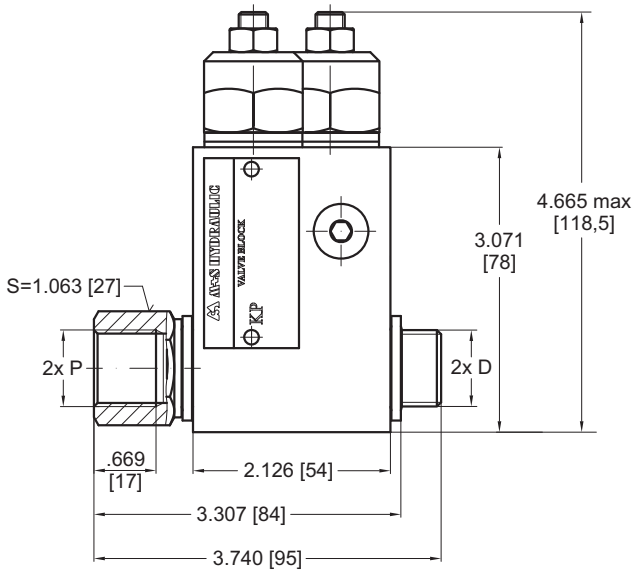

KPDW-...A

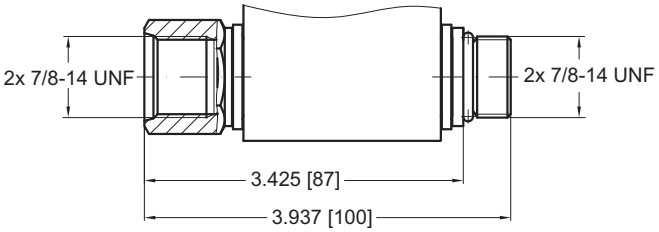

SINGLE VALVE KPEAW...

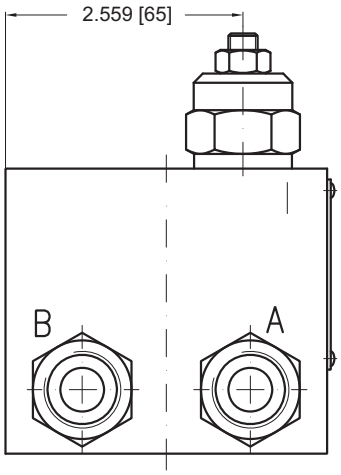

SINGLE VALVE KPEBW...

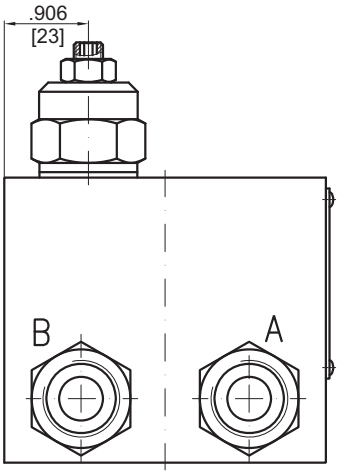

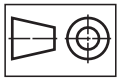

in [mm]

	Thread Ports - $P_{(A,B)}$	Thread Ports - D
-	G1/2 .63 [16] depth	G1/2 .47 [12] length
M	M22x1,5 .63 [16] depth	M22x1,5 .47 [12] length
A	7/8 - 14 UNF O-ring .63 [16] depth	.47 [12] UNF O-ring .51 [13] length

Note : **KPDW** and **KPE..W** Blocks assembly to MLHRW or HW motors is done with two screws (thread **D**) included in the valve set. Tightening torque 710 lb-in [8 daNm].

CROSS PORT RELIEF VALVES

SPECIFICATION DATA

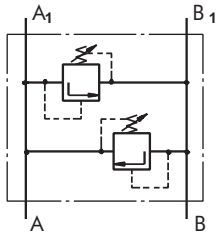

Dual Cross Port Relief Valves type KPDHR... and KPDRK...

Parameters		Type					
		KPDHR			KPDRK		
Flow Rate,	GPM [lpm]	15.85 [60]					
Pressure Range*,	PSI	70÷580	435÷1450	1160÷3625	145÷580	435÷1450	1160÷3625
	[bar]	[5÷40]	[30÷100]	[80÷250]	[10÷40]	[30÷100]	[80÷250]
Weight,	lb	5.34			3.53		
	[kg]	[2,420]			[1,600]		

*Pressure Settings are at flow rate of 1.3 GPM [5 lpm] and viscosity 150 SUS [32 mm²/s] (122° F [50°C]).

VALVES FOR HP AND HR HYDRAULIC MOTORS

DUAL VALVE KPDHR

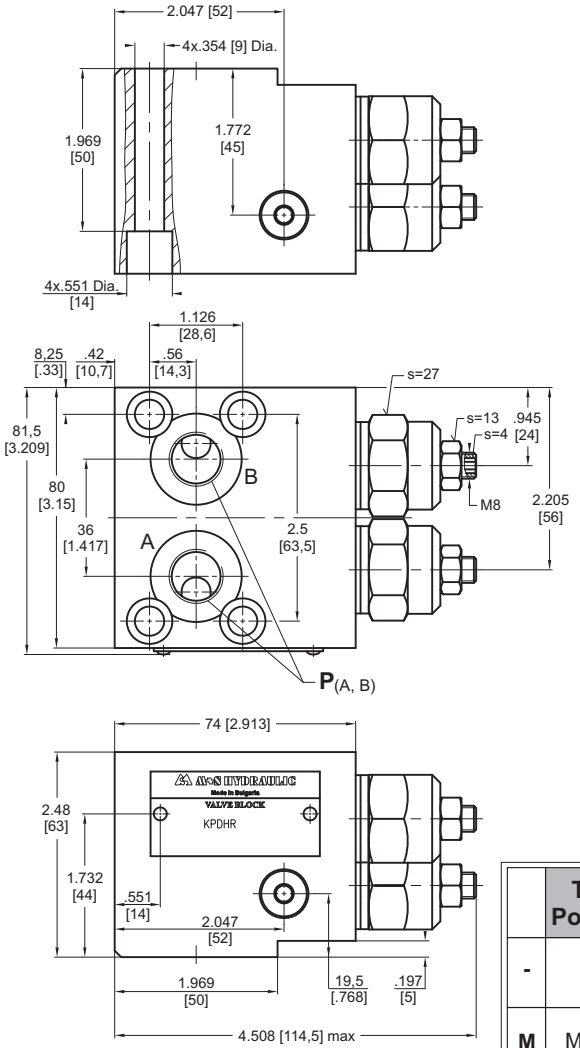

	Thread Ports - $P_{(A,B)}$
-	G3/8
M	M18x1,5
A	3/4-16 UNF O-ring

VALVES FOR RK HYDRAULIC MOTORS

DUAL VALVE KPDRK

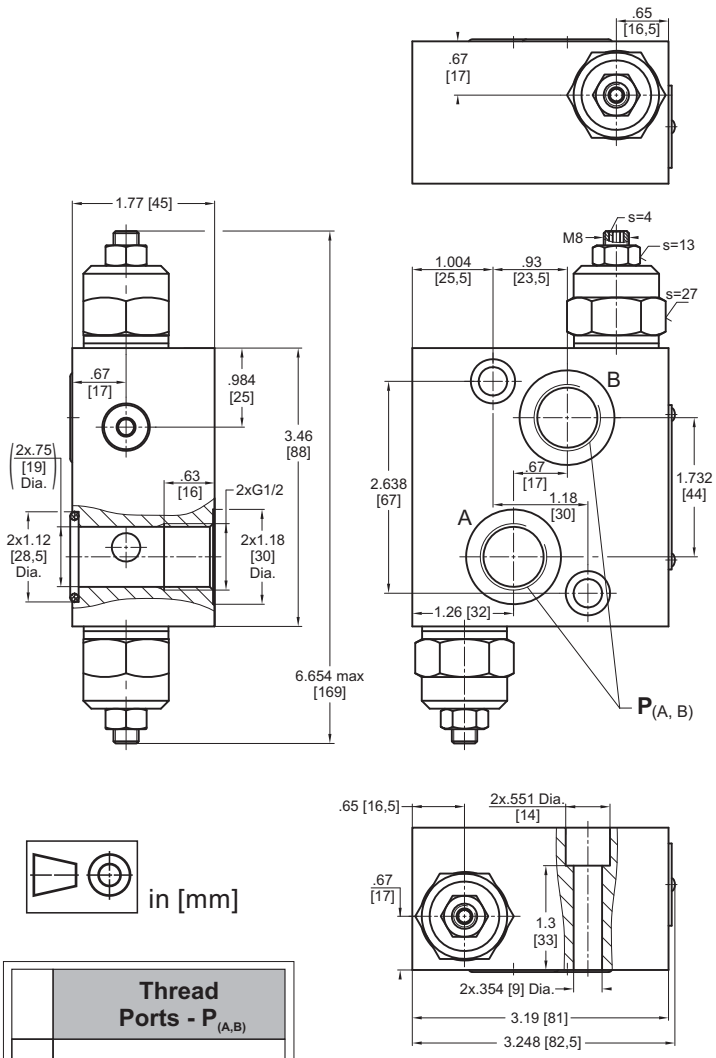

in [mm]

	Thread Ports - $P_{(A,B)}$
-	G1/2

Note : KPDHR Blocks are installed directly on HP and HR Motors with four screws 5/16-18 UNC, 2.5 long ANSI B 18.3 or M8x60 - 8.8 DIN 912.
KPDRK Blocks are installed directly on RK Motors with two screws 5/16-18 UNC, 1.75 long ANSI B 18.3 or M8x45 - 8.8 DIN 912.
Tightening torque $2,0^{+0,5}$ daNm [177^{+45} lb-in].

ORDER CODE - OVERCENTER VALVES WITH BRAKE CONTROL

	1		2		3		4	5	6	7
K P B		-		/		/				

Pos.1 - Housing Type

R	- Valve block for MP, MR and MH Motors
S	- Valve block for MS Motors
W	- Valve block for RW and HW Motors
T	- Valve block for MT Motors
V	- Valve block for MV Motors
HR	- Valve block for HP and HR Motors

Pos.2 - Pressure Range, PSI [bar]

250	- 1015÷3625 [70÷250], Std Setting 250 bar@5 lpm

Pos.3 - Pilot Ratio

1	- 4,25:1

Pos.4 - Number of Valves

D	- Two Valves - Dual
E	- One Valve - Single (for R and S only)
AE	- One Valve on line A - Single (for T, V and W only)
BE	- One Valve on line B - Single (for T, V and W only)

Pos.5 - Threaded Ports

omit	- BSPP thread - ISO 228
M	- Metric thread - ISO 262
A	- Unified inch screw threads ANSI B 1.1 - 1982

Pos.6 - Option [Paint]**

omit	- no Paint
P	- Painted
PC	- Corrosion Protected Paint

Pos.7 - Design Series

omit - Factory specified

Notes: * Color at customer's request.

ORDER CODE - SWITCH VALVES

	1	2	3	4
K P W				

Pos.1 - Housing Type

R	- Valve block for MP, MR and MH Motors
S	- Valve block for MS Motors
T	- Valve block for MT Motors
V	- Valve block for MV Motors

Pos.2 - Threaded Ports

omit	- BSPP thread - ISO 228
M	- Metric thread - ISO 262
A	- Unified inch screw threads ANSI B 1.1 - 1982

Pos.3 - Option [Paint]**

omit	- no Paint
P	- Painted
PC	- Corrosion Protected Paint

Pos.4 - Design Series

omit - Factory specified

Notes: * Color at customer's request.

ORDER CODE - CROSSOVER RELIEF VALVE

	1	2	3		4	5	6
K P				/			

Pos.1 - Number of Valves

D	- Two Valves - Dual
E	- One Valve - Single (for **R** and **S** only)
EA	- One Valve on line A - Single (for **T, V** and **W** only)
EB	- One Valve on line B - Single (for **T, V** and **W** only)

Pos.2 - Housing Type

R	- Valve block for MP, MR and MH Motors
S	- Valve block for MS Motors
W	- Valve block for RW and HW Motors
T	- Valve block for MT Motors
V	- Valve block for MV Motors

Pos.3 - Pressure Range, bar [PSI]

100*	- 30÷100 [435÷1450], Std Setting 100 bar@5 lpm
210*	- 50÷210 [725÷3050], Std Setting 210 bar@5 lpm
300*	- 80÷300 [1160÷4350], Std Setting 250 bar@5 lpm
210**	- 80÷210 [1160÷3050], Std Setting 210 bar@5 lpm
100***	- 10÷100 [145÷1450], Std Setting 100 bar@5 lpm
250***	- 20÷250 [290÷3625], Std Setting 250 bar@5 lpm

Pos.4 - Threaded Ports

omit	- BSPP thread - ISO 228
M	- Metric thread - ISO 262
A	- Unified inch screw threads ANSI B 1.1 - 1982

Pos.5 - Option [Paint]****

omit	- no Paint
P	- Painted
PC	- Corrosion Protected Paint

Pos.6 - Design Series

omit - Factory specified

Notes:
- * Useful for types **R** and **S** only.
- ** Useful for types **T** only.
- *** Useful for types **V** only.
- **** Color at customer's request.

The Valve Blocks are mangano phosphatized as standard.

ORDER CODE - CROSS PORT RELIEF VALVE

	1	2	3		4	5	6
K P				/			

Pos.1 - Number of Valves

D	- Two Valves - Dual

Pos.2 - Housing Type

HR	- Valve block for HR Motors
RK	- Valve block for RK and GHL Motors

Pos.3 - Pressure Range, PSI [bar]

40	- 145÷ 580 [10÷ 40], Std Setting 100 bar@5 lpm
100	- 435÷1450 [30÷100], Std Setting 100 bar@5 lpm
250	- 1160÷3625 [80÷250], Std Setting 250 bar@5 lpm

Pos.4 - Threaded Ports

omit	- BSPP thread - ISO 228
M	- Metric thread - ISO 262
A	- Unified inch screw threads ANSI B 1.1 - 1982

Pos.5 - Option [Paint]*

omit	- no Paint
P	- Painted
PC	- Corrosion Protected Paint

Pos.6 - Design Series

omit	- Factory specified

Notes: * Color at customer's request.

The Valve Blocks are mangano phosphatized as standard.

MOTOR-BRAKE SPECIAL FEATURES

Special Feature Description	Order Code	Motor type			
		B/HR	RWB	SW	TW
Low Leakage	LL	O	O	-	-
Low Speed Valving	LSV	O	O	-	-
Free Running	FR	-	-		-
Reverse Rotation	R	O	O	-	-
Paint*	P	O	O	O	O
Corrosion Protected Paint*	PC	O	O	O	O
Special Paint**	PS	O	O	O	O
	PCS				
Check Valves		-	O	S	S

O	Optional
-	Not applicable
S	Standard

* Colour at customer's request.
** Non painted feeding surfaces, colour at customer's request.

APPLICATION CALCULATION

VEHICLE DRIVE CALCULATIONS

1.Motor speed: n, RPM

$$n=\frac{168 \times v_{ml} \times i}{R_{in}} \qquad n=\frac{2{,}65 \times v_{km} \times i}{R_m}$$

v_{km}- vehicle speed, km/h;
v_{ml}- vehicle speed, mile/h;
R_m- wheel rolling radius, m;
R_{in}- wheel rolling radius, in;
i- gear ratio between motor and wheels.
If no gearbox, use i=1.

2.Rolling resistance: RR, lbs [daN]
The resistance force resulted in wheels contact with different surfaces:

$$RR=G \times \rho$$

G- total weight loaded on vehicle, lbs [daN];
ρ- rolling resistance coefficient (Table 1).

Table 1

Rolling resistance coefficient In case of rubber tire rolling on different surfaces	
Surface	**ρ**
Concrete- faultless	0.010
Concrete- good	0.015
Concrete- bad	0.020
Asphalt- faultless	0.012
Asphalt- good	0.017
Asphalt- bad	0.022
Macadam- faultless	0.015
Macadam- good	0.022
Macadam- bad	0.037
Snow- 5 cm	0.025
Snow- 10 cm	0.037
Polluted covering- smooth	0.025
Polluted covering- sandy	0.040
Mud	0.037÷0.150
Sand- Gravel	0.060÷0.150
Sand- loose	0.160÷0.300

3.Grade resistance: GR, lbs [daN]

$$GR=G \times (\sin\alpha + \rho \times \cos\alpha)$$

α- gradient negotiation angle (Table 2)

Table 2

Grade %	α Degrees	Grade %	α Degrees
1%	0º 35'	12%	6º 5'
2%	1º 9'	15%	8º 31'
5%	2º 51'	20%	11º 19'
6%	3º 26'	25%	14º 3'
8%	4º 35'	32%	18º
10%	5º 43'	60%	31º

4. Acceleration force: FA, lbs [daN]
Force **FA** necessary for acceleration from 0 to maximum speed **v** and time **t** can be calculated with a formula:

$$FA=\frac{v_{ml} \times G}{22 \times t}, \text{[lbs]}; \qquad FA=\frac{v_{km} \times G}{36 \times t}, \text{[daN]}$$

FA- acceleration force, lbs [daN];
t- time, [s].

5.Tractive effort: DP, lbs [daN]
Tractive effort DP is the additional force of trailer. This value will be established as follows:
-acc.to constructor's assessment;
-as calculating forces in items 2, 3 and 4 of trailer; the calculated sum corresponds to the tractive effort requested.

6.Total tractive effort: TE, lbs [daN]
Total tractive effort **TE** is total effort necessary for vehicle motion; that the sum of forces calculated in items from 2 to 5 and increased with 10 % because of air resistance.

$$TE=1{,}1 \times (RR + GR + FA + DP)$$

RR - force acquired to overcome the rolling resistance;
GR- force acquired to slope upwards;
FA- force acquired to accelerate (acceleration force);
DP- additional tractive effort (trailer).

7.Motor Torque moment: M, lb-in [daNm]
Necessary torque moment for every hydraulic motor:

$$M=\frac{TE \times R_{in}[R_m]}{N \times i \times \eta_M}$$

N- motor numbers;
η_M- mechanical gear efficiency (if it is available).

8.Cohesion between tire and road covering: M_w, lb-in [daNm]

$$M_W=\frac{G_W \times f \times R_{in}[R_m]}{i \times \eta_M}$$

To avoid wheel slipping, the following condition should be observed $M_W > M$
f - frictional factor;
G_W- total weight over the wheels, lbs [daN].

Table 3

Surface	Frictional factor f
Steel on steel	0.15 ÷ 0.20
Rubber tire on polluted surface	0.5 ÷ 0.7
Rubber tire on asphalt	0.8 ÷ 1.0
Rubber tire on concrete	0.8 ÷ 1.0
Rubber tire on grass	0.4

9.Radial motor loading: P_{rad} , lbs [daN]
When motor is used for vehicle motion with wheels mounted directly on motor shaft, the total radial loading of motor shaft P_{rad} is a sum of motion force and weight force acting on one wheel.

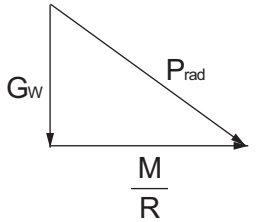

$$P_{rad}=\sqrt{G_W^2+\left(\frac{M}{R}\right)^2}$$

G_W - Weight held by wheel;
P_{rad} - Total radial loading of motor shaft;
M/R- Motion force.

In accordance with calculated loadings the suitable motor from the catalogue is selected.

DRAINAGE SPACE AND DRAINAGE PRESSURE

Advantages in oil drainage from drain space: Cleaning; Cooling and Seal lifetime prolonging.

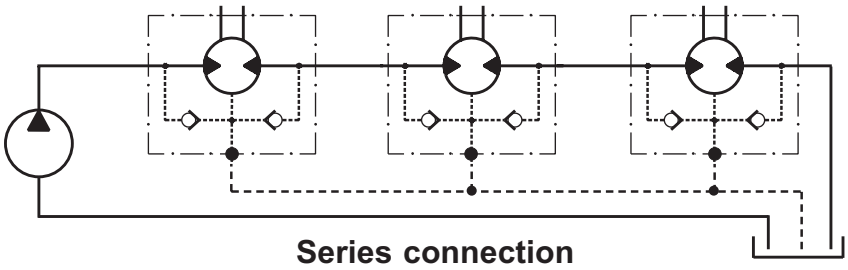

Series connection

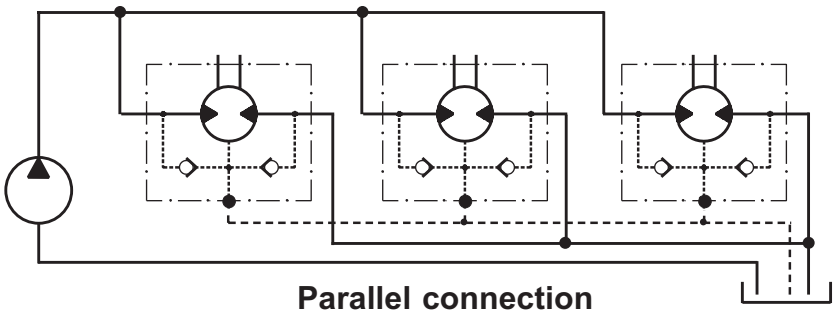

Parallel connection

WARRANTY

M+S Hydraulic warrants, that its products, supplied directly to original equipment manufacturer, authorized distributor or other customer, will be free of defects in material or workmanship at the time of shipment from M+S Hydraulic and will conform to the products technical documentation (drawings and specifications) under sale agreement with Buyer.

This warranty will apply only to defects appearing within applicable Warranty period, mentioned below. If Buyer notifies M+S Hydraulic within the Warranty period about any such defects, M+S, at its sole option will replace or repair the defective products or their parts found by M+S Hydraulic to be defective in material or workmanship.

THE FOREGOING LIMITED WARRANTY IS AVAILABLE ONLY IF “M+S HYDRAULIC” IS PROMPTLY NOTIFIED IN WRITTEN OF THE ALLEGED DEFECT AND DOES NOT COVER FAILURE TO FUNCTION CAUSED BY DAMAGE TO THE PRODUCT, IMPROPER INSTALLATION, UNREASONABLE USE OR ABUSE OF THE PRODUCT, FAILURE TO PROVIDE OR USE OF IMPROPER MAINTENANCE OR USUAL, DEGRADATION OF THE PRODUCT DUE TO PHYSICAL ENVIRONMENTS OF AN USUAL NATURE. THE FOREGOING REMEDIES ARE THE SOLE AND EXCLUSIVE REMEDIES AVAILABLE TO CUSTOMER. To facilitate the inspection, M+S Hydraulic may require return of the product/part, which Buyer claims to be defective.

M+S Hydraulic shall not be liable for labor costs or any other expenses incurred during the disassembling or reinstalling of the product/part.

In case the claimed products are returned to M+S Hydraulic in bad condition: dirty, disassembled, with damaged or missing parts during transportation, the warranty will be considered as not applicable and the products will not be liable to repair.

Warranty periods

New products: The Warranty period is limited to 24 consecutive months (2 years) from the date of production of the product.

Repaired products: If the product is repaired in M+S Hydraulic during its warranty period, the warranty period of the repaired item shall continue for the balance of original Warranty period or for a period equal to 50% of the original new product Warranty period, whichever is later.

Spare parts: The Warranty period for Spare parts is 12 consecutive months (1 year) from the dispatch date of such parts from M+S Hydraulic.

LIMITATION OF LIABILITY M+S Hydraulic's liability for claim of any kind, for loss or damage arising out of, connected with or resulting from an order, or from the performance or branch thereof, or from the design, manufacture, sale delivery, operation or use of any of its products shall be limited to, at M+S 's sole option, replacement, repair of any defective product or the issuance of a credit to Customer against any future purchases. Cash refunds will not be made under any circumstances and Customer will not be entitled to recover any damages of any kind against M+S Hydraulic, including but not limited to incidental or consequential damages, whether direct or indirect, known or unknown, foreseen or unforeseen.

M+S HYDRAULIC

68, Kozloduy St., 6100 Kazanlak, Bulgaria
Tel.: ++359 431 65167
++359 431 64271
Fax: +359 431 64114
E-Mail: msh@ms-hydraulic.com
URL: http://www.ms-hydraulic.com